MEGARUBBER

ISORAN® RPP Gold

THE ULTIMATE POWER

MAK AANDRIJVINGEN

www.mak.nl

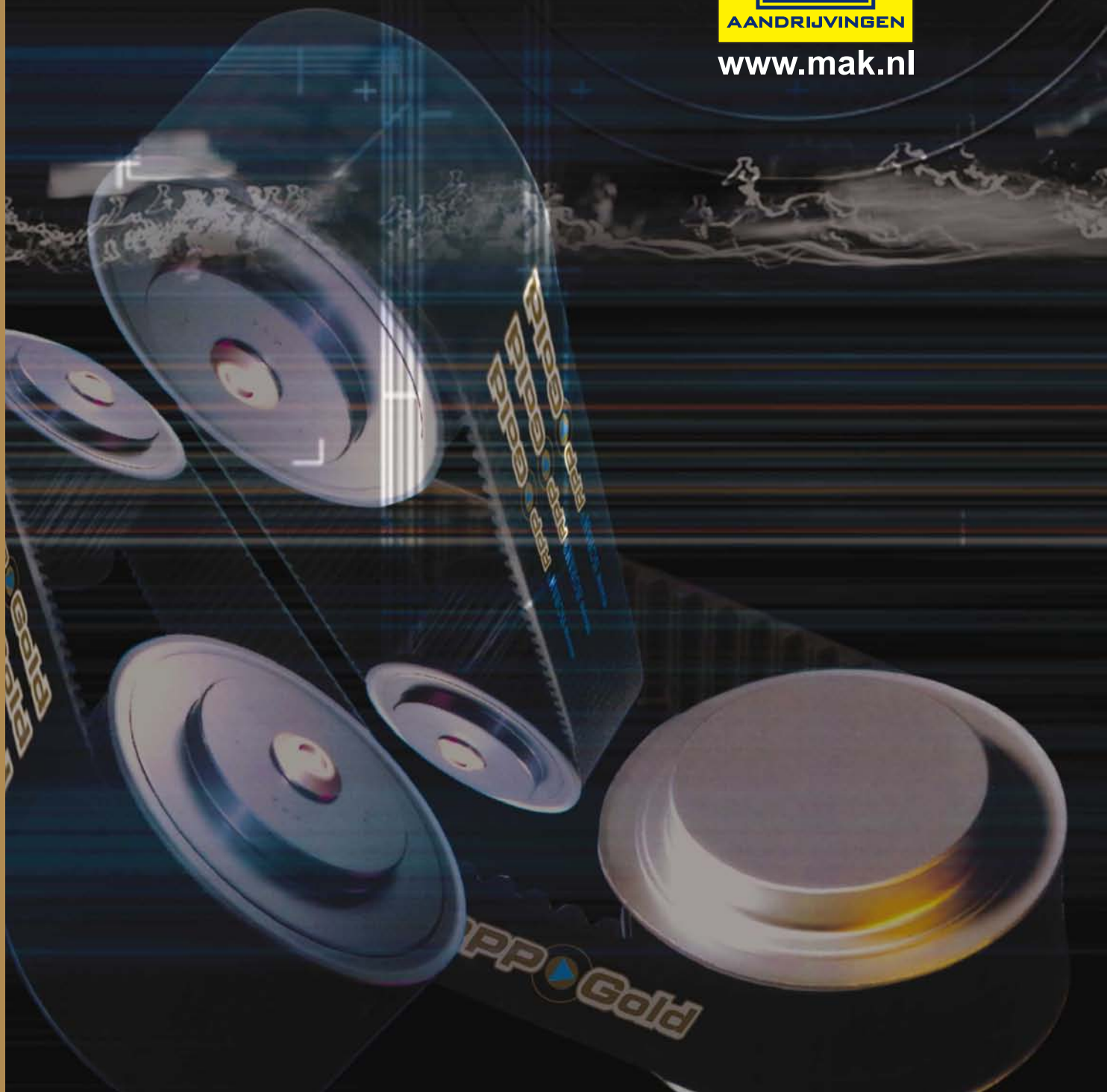

CALCULATION HANDBOOK

ISORAN® RPP Gold

STRUCTURE 8

FEATURES 10

BELT SPECIFICATION 11

STANDARD BELT RANGE 12

DESIGN OF TIMING BELT DRIVES 13

BASIC PERFORMANCE IN KW 14

DRIVE CALCULATION PROCEDURE 18

FORCES ON AXES AND BEARINGS 33

CENTRE DISTANCES TABLE 38

ISORAN RPP PULLEYS 62

BELT FAILURES 68

USUAL FORMULA 71

MEGADYNE IS

RAN®
RPP
Gold

ISORAN® RPP Gold

"THE ULTIMATE POWER"

It's beyond doubt that Megadyne is proud to introduce the New ISORAN RPP GOLD Timing Belt Drive System.
In the last years the Megadyne's research activity on timing belts has been focused on the development of a new hi-performance system, with the target to significantly improve the "specific power " and really get new application opportunities against those alternative systems like gears, chains, that always have a disadvantage in terms of weight, noise, lubrication and maintenance costs.
The natural starting point has been constituted by the long experience cumulated with the existing ISORAN RPP PANTHER line, well known and consolidated in the marketplace. We have tried to improve its characteristics but keeping fixed two basic assumptions:

- Develop a new belt / system, but always in rubber to minimise or not change the noise level of the new drives;
- Retain the RPP teeth profile to guarantee an easy up-grade of the existing drives, in the spirit and concept of interchangeably which has identified, in the last years, our market approach philosophy.

In general every belt component contribute to improve the global mechanical resistance, to minimise the risk of belt breaking or failure and grant a bigger "specific power" capacity, that means higher basic design performance.
However, the tensile cords used for the belt have a significant role to improve the power performance, because they have to support tension loads always bigger. Today hi-performance belts are built with a tensile cord made by steel or aramide fibres.
Aramide fibres, as well known, have a very pour dimensional stability over the lifetime, thus a timing belt made with this type of tensile cords will have problems in their length (pitch) stability, also under stocking conditions where it's also possible to detect a shrinkage in the belt free length. Naturally any belt pitch variation will have a negative impact on the expected lifetime of the drive, because the meshing error that is generated with the pulleys. Compensate this phenomena is not easy and normally with aramide fibres in a rubber matrix it's necessary to use higher static tensions to generate a pre-stretch.
Furthermore to improve dimensional stability over the time, the aramide cords require normally an adhesion treatment which is more complex and expensive than other materials; then if this is not done properly, there can be the possibility to get problems in the assembly process, in particular cutting the belts.
On the other side, the tensile cords made in steel will have an excellent dimensional stability over the lifetime, but they will have a very high specific weight. Using steel cords in association with conventional process for belt assembly can generate extra problems in cutting and finishing the belts; in fact the cords are normally spirally winded, thus when the belts are cut there is always a portion of cord that come out from belt side. For safety reasons, these portions of cord must be stripped away and/or properly sealed with adhesive.
Thus the new ISORAN RPP GOLD is a rubber belt, which solve the previous problems related to steel and aramide cords, reaching highest level of performance thanks to the balanced use of new materials.

ISORAN RPP

The new GOLD is constructed with materials of the highest quality and strength. Extensive development performed by Research & Development has resulted in the homogeneous integration of all components, the cohesive bond of which imparts superior torque capacity giving the new GOLD the possibility to provide the maximum performance in the market.

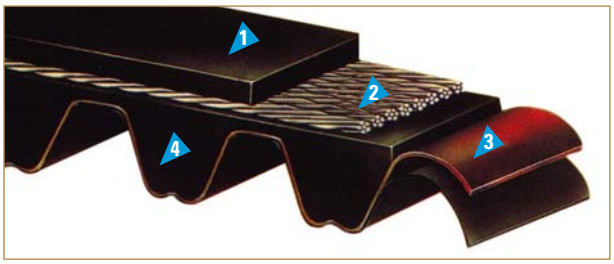

ISORAN RPP GOLD STRUCTURE

1 THE BELT BODY

FLEX FATIGUE RESISTANCE (STANDARD ASTM D 813)

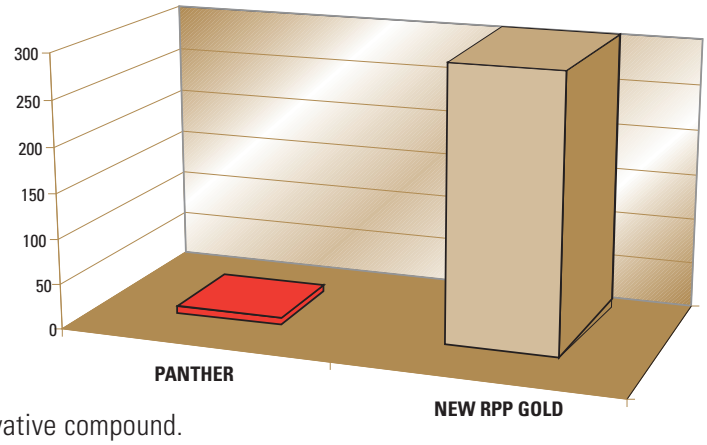

It's formed by aninnovative compound.
This cross-linked elastomer increases resistance to tooth shearing up to 15% in comparison to the previous Panther belts. This compound guarantees an exceptional level of resistance to flex fatigue preventing the appearance of cracks also with small pulley diameters. The results of the " test made in accordance with the standards ASTM D813 showed an incredible improvement in the flex fatigue resistance up to 500 times more than the previous version.
Furthermore this compound is formulated to considerably resist the effects of mineral oils (test conditions 22h at 100°C in ASTM1 oil; 20% less hardness decrease Vs actual Panther), heat and ozone.

2 TENSION MEMBERS

- The glass fibre tensile members are the load carrying element in the new ISORAN RPP GOLD.
- Thanks to the excellent characteristic of this cord the new ISORAN RPP GOLD has a superior tension stability in static and dynamic conditions, in particular when compared with other aramid reinforced belts. This performance can eliminate any kind of re-tensioning procedure, providing a real maintenance-free operation and guarantying always a perfect tooth meshing with reduction of abrasion, vibrations and noise.
- The higher tensile strength (10-20% higher than the old generation) and superior flexibility of the New ISORAN RPP GOLD belt grants more compact drives and durability.

3 TOOTH FACING FABRIC

A hard-wearing nylon fabric is bonded to the tooth surface to improve torque carrying capacity. In addition, a special graphite impregnation process confers self-lubricating action and increased drive efficiency on the belt.

A pronounced improvement in belt performance results from the adoption of this system, which can be summarised as follows:

- Better tension stability
- Longer life resistance
- Higher power performance
- More compact and lightweight drives with same power rating
- Exceptional resistance to abrasion and tooth shear
- No stocking and packaging constraints

PROFILE

New GOLD features the proven reinforced parabolic profile RPP, illustrated in Figure1. The RPP belt profile, a deeper and more efficient belt tooth design, enables the belt to transmit more power, while occupying less space.

Figure 1

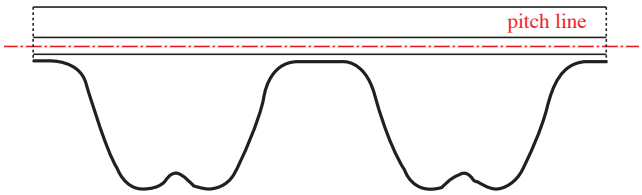

The reinforced parabolic profile of the new ISORAN RPP GOLD belt has an angle which increases from the base to the top of the tooth; this characteristic allows the use of a deeper profile compared to standard belts.
The patented RPP parabolic profile grant the following advantages:
a) A substantial reduction in noise compared to standard tooth profiles, and significantly lower than other deep tooth profiles;
b) An improvement in tooth jump resistance.
c) A substantial increase in torque and power transmission capabilities.
d) Much higher resistance to tooth shear.
e) Improved meshing characteristics, and reduced interference during tooth engagement and disengagement with the pulley.
f) Reduced installation tension, leading to lower axial bearing loads.

The recess at the top of the tooth.
The tooth recess confers the following additional features to new ISORAN RPP GOLD belts:
g) Controlled deformation of the softer top section of the tooth.
h) Lower interference, and improved meshing characteristics.
i) Less noise due to tooth impact during tooth mesh, and improved air discharge.
j) Less wear due to friction.

FEATURES

The new ISORAN RPP GOLD can be really consider a reliable, lower maintenance and economical alternative to drive systems equipped with chains and gears. Thanks to its "state of the art" materials, the new ISORAN RPP GOLD is particularly recommended for efficient, compact drives which experience high torque loading, and permit the designer much greater flexibility by means of the following advantages:

- Increases load carrying capacity by up to 35% compared to previous RPP Panther, and more than 220% compared to the RPP SILVER.
- Uses existing RPP pulleys, which maintains functional interchangeability with other deep profile systems as HTD.
- Allows existing systems to be upgraded without the necessity to replace the pulleys.

Because the new ISORAN RPP GOLD retains the already proven RPP belt profile (recognised as the quie test system on the market), it possesses all the known advantages of low noise of the RPP belt profile. In addition to this it has the extra advantages of:

- Further reduction of noise by reduced belt width due to the higher performance rating of the system.
- Low noise characteristics compared to drive systems using polyurethane, steel etc due to the rubber construction.
- Use of smaller pulleys creates lower belt speeds and thereby less noise.
- Under the same transmission conditions the new ISORAN RPP GOLD has the same noise level of the previous generation.

BELT SPECIFICATION

A New ISORAN RPP GOLD belt is defined by the following parameters:

BELT PITCH:

the distance in millimetres between two adjacent tooth centres as measured along the pitch line of the belt.

BELT PITCH LENGTH:

the total length (circumference) of the belt in millimetres as measured along the pitch line. (The theoretical pitch line of a New Gold belt lies within the tensile member).
The pitch length is a parameter that identify univocally a synchronous drive belt. To measure a belt is necessary to use a suitable measuring equipment as specified in the standard ISO/FDIS 13050:1999(E). All data not directly reported can be referred to this mentioned standard.

BELT WIDTH:

the width of the belt measured in millimetres.

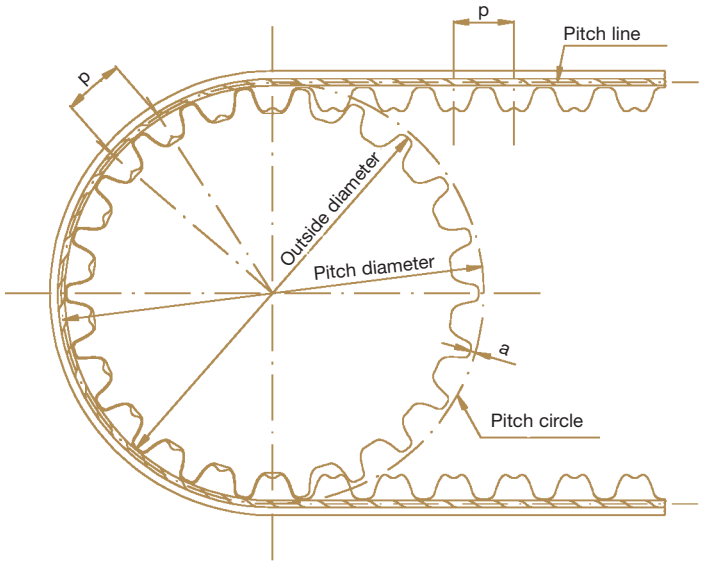

Figure 2 The nominal belt tooth dimensions are given in Table A1 and shown in Figure 2

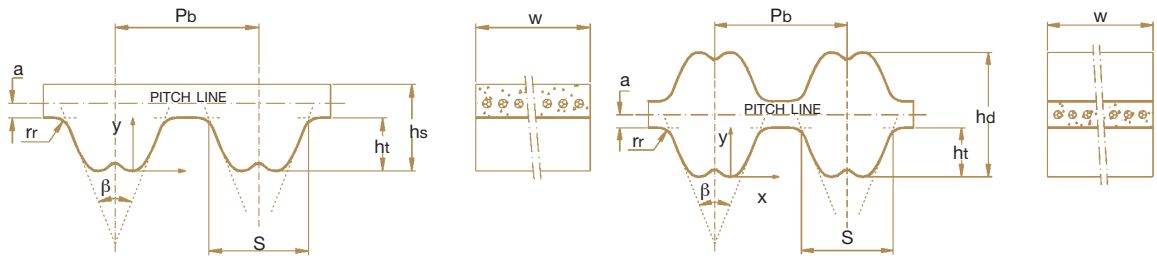

Table A1

Belt type	Pitch	ß	S	hs	hd	ht	rr	a
8 M	8 mm	32°	5.5	5.4		3.2	1.00	0.686
14 M	14 mm	32°	9.5	9.7		6.0	1.75	1.397
8 M-DD	8 mm	32°	5.5		7.8	3.2	1.00	0.686
14 M-DD	14 mm	32°	9.5		14.5	6.0	1.75	1.397

STANDARD BELT RANGE

New Gold belts are manufactured in 8 and 14mm pitches; on request can be provided also in the double sided version.
Standard belt sizes are listed in the following table:

ISORAN RPP GOLD 8

PITCH AND LENGTH DESIGNATION	PITCH LENGTH (mm)	Nº OF TEETH
288-GLD8	288	36
320-GLD8	320	40
352-GLD8	352	44
360-GLD8	360	45
384-GLD8	384	48
408-GLD8	408	51
456-GLD8	456	57
480-GLD8	480	60
536-GLD8	536	67
544-GLD8	544	68
560-GLD8	560	70
600-GLD8	600	75
608-GLD8	608	76
632-GLD8	632	79
640-GLD8	640	80
680-GLD8	680	85
720-GLD8	720	90
800-GLD8	800	100
840-GLD8	840	105
880-GLD8	880	110
896-GLD8	896	112
920-GLD8	920	115
960-GLD8	960	120
1000-GLD8	1000	125
1040-GLD8	1040	130
1080-GLD8	1080	135
1120-GLD8	1120	140
1200-GLD8	1200	150
1224-GLD8	1224	153
1280-GLD8	1280	160
1352-GLD8	1352	169
1440-GLD8	1440	180
1464-GLD8	1464	183
1600-GLD8	1600	200
1760-GLD8	1760	220
1800-GLD8	1800	225
2000-GLD8	2000	250
2200-GLD8	2200	275
2400-GLD8	2400	300
2520-GLD8	2520	315
2600-GLD8	2600	325
2800-GLD8	2800	350
3048-GLD8	3048	381
3280-GLD8	3280	410
3600-GLD8	3600	450
4400-GLD8	4400	550

ISORAN RPP GOLD 14

PITCH AND LENGTH DESIGNATION	PITCH LENGTH (mm)	Nº OF TEETH
966-GLD14	966	69
994-GLD14	994	71
1092-GLD14	1092	78
1106-GLD14	1106	79
1190-GLD14	1190	85
1260-GLD14	1260	90
1288-GLD14	1288	92
1344-GLD14	1344	96
1400-GLD14	1400	100
1442-GLD14	1442	103
1568-GLD14	1568	112
1610-GLD14	1610	115
1764-GLD14	1764	126
1778-GLD14	1778	127
1890-GLD14	1890	135
1960-GLD14	1960	140
2100-GLD14	2100	150
2240-GLD14	2240	160
2310-GLD14	2310	165
2380-GLD14	2380	170
2450-GLD14	2450	175
2590-GLD14	2590	185
2660-GLD14	2660	190
2800-GLD14	2800	200
3150-GLD14	3150	225
3360-GLD14	3360	240
3500-GLD14	3500	250
3850-GLD14	3850	275
3920-GLD14	3920	280
4326-GLD14	4326	309
4578-GLD14	4578	327
4956-GLD14	4956	354

RPP GOLD belt designation is:

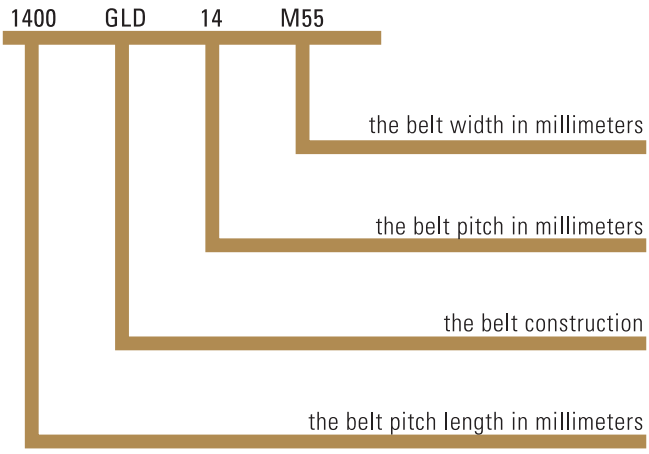

SYMBOLS, UNITS, TERMS.

Symbol	Description	Unit
α	Free span length angle	[°]
β	Wrap angle on small pulley	[°]
σ	Drive safety factor	
C_c	Corrected service factor	
C_d	Teeth in mesh factor	
C_w	Belt width factor	
$C_w$listed	Belt width factor listed	
C_m	Speed up factor	
d_1	DriveR pulley pitch diameter	[mm]
d_2	DriveN pulley pitch diameter	[mm]
d_S	Small pulley pitch diameter	[mm]
d_L	Large pulley pitch diameter	[mm]
F_s	Service factor	
f	Deflection distance	[mm]
f_r	Frequency	[Hz]
i	Speed ratio	
l	Centre distance	[mm]
K_1	Belt length factor	
K_m	Class of motor factor	
L_p	Pitch belt length	[mm]
m	Belt mass per unit length	[kg/m]

Symbol	Description	Unit
n_1	Speed on driveR pulley	[rpm]
n_2	Speed on driveN pulley	[rpm]
n_S	Speed on faster shaft	[rpm]
n_L	Speed on slower shaft	[rpm]
p	Belt/pulley pitch	[mm]
P	Motor power	[kW]
P_a	Absorbed power	[kW]
P_b	Basic performance	[kW]
P_{ba}	Actual power rating	[kW]
P_c	Design power	[kW]
R	Speed ratio	
t	Free span length	[mm]
v	Belt linear speed	[m/s]
w	Belt width	[mm]
z_1	Number of teeth on driveR pulley	
z_2	Number of teeth on driveN pulley	
z_S	Number of teeth on small pulley	
z_L	Number of teeth on large pulley	
z_b	Number of teeth of the belt	
z_t	Number of teeth in mesh	

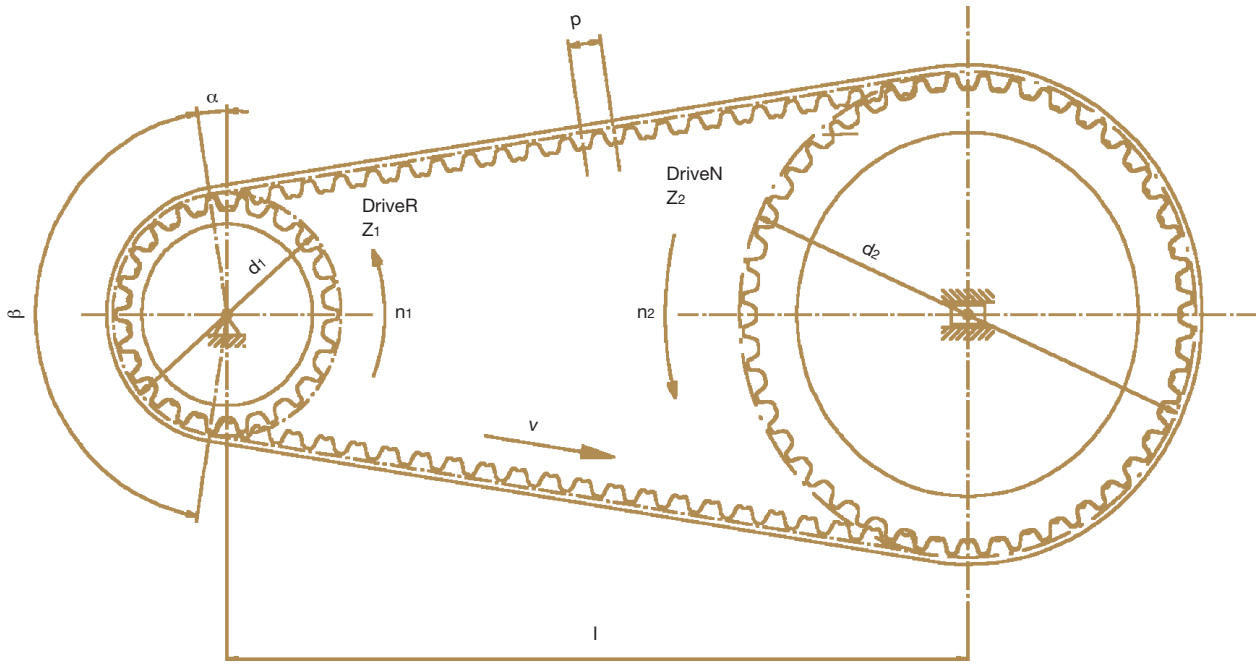

Table 6

BASIC PERFORMANCE IN kW FOR GOLD 8-20 mm WIDE

Diam	56,02	61,12	66,21	71,30	76,39	81,49	86,58	91,67	96,77	101,86	112,05	122,23	142,60	162,97	183,3	203,72
rpm/Z	22	24	26	28	30	32	34	36	38	40	44	48	56	64	72	80
10	0,10	0,11	0,12	0,13	0,14	0,15	0,16	0,17	0,18	0,19	0,21	0,22	0,26	0,30	0,34	0,37
20	0,18	0,20	0,22	0,24	0,25	0,27	0,29	0,31	0,33	0,35	0,39	0,43	0,51	0,60	0,67	0,75
30	0,26	0,28	0,31	0,34	0,36	0,39	0,42	0,45	0,48	0,50	0,56	0,62	0,74	0,85	0,98	1,10
50	0,40	0,45	0,49	0,53	0,57	0,62	0,66	0,70	0,75	0,79	0,88	0,97	1,16	1,34	1,53	1,73
70	0,54	0,60	0,66	0,71	0,77	0,83	0,89	0,95	1,01	1,07	1,19	1,31	1,56	1,81	2,07	2,33
100	0,75	0,82	0,90	0,98	1,06	1,14	1,22	1,30	1,38	1,46	1,63	1,79	2,13	2,48	2,83	3,19
200	1,38	1,52	1,66	1,81	1,95	2,10	2,25	2,40	2,55	2,70	3,00	3,31	3,94	4,58	5,23	5,89
300	1,97	2,18	2,38	2,59	2,80	3,01	3,22	3,43	3,65	3,86	4,30	4,74	5,64	6,56	7,48	8,43
400	2,54	2,81	3,07	3,34	3,61	3,88	4,15	4,43	4,70	4,98	5,55	6,12	7,28	8,46	9,65	10,86
500	3,10	3,42	3,74	4,07	4,39	4,72	5,06	5,39	5,73	6,07	6,76	7,45	8,86	10,30	11,75	13,23
600	3,64	4,02	4,40	4,78	5,16	5,55	5,94	6,34	6,73	7,13	7,94	8,76	10,41	12,10	13,81	15,54
700	4,17	4,60	5,04	5,47	5,92	6,36	6,81	7,26	7,72	8,18	9,10	10,03	11,93	13,86	15,81	17,80
800	4,70	5,18	5,67	6,16	6,66	7,16	7,66	8,17	8,68	9,20	10,24	11,29	13,42	15,59	17,79	20,01
900	5,21	5,75	6,29	6,84	7,39	7,94	8,50	9,07	9,64	10,21	11,36	12,52	14,89	17,29	19,72	22,19
1000	5,72	6,31	6,90	7,50	8,11	8,72	9,33	9,95	10,57	11,20	12,46	13,74	16,33	18,97	21,63	24,33
1100	6,23	6,86	7,51	8,16	8,82	9,48	10,15	10,82	11,50	12,18	13,56	14,94	17,76	20,62	23,51	26,44
1200	6,72	7,41	8,11	8,81	9,52	10,24	10,96	11,69	12,42	13,15	14,63	16,13	19,17	22,25	25,37	28,52
1300	7,22	7,96	8,70	9,46	10,22	10,99	11,76	12,54	13,32	14,11	15,70	17,31	20,56	23,86	27,20	30,57
1400	7,70	8,49	9,29	10,10	10,91	11,73	12,56	13,39	14,22	15,06	16,76	18,47	21,93	25,45	29,00	32,58
1500	8,19	9,03	9,88	10,73	11,60	12,47	13,34	14,22	15,11	16,00	17,80	19,62	23,29	27,02	30,78	34,57
1600	8,67	9,56	10,45	11,36	12,27	13,19	14,12	15,05	15,99	16,93	18,84	20,76	24,64	28,57	32,54	36,54
1700	9,14	10,08	11,03	11,98	12,95	13,92	14,89	15,88	16,86	17,86	19,86	21,88	25,97	30,11	34,28	38,47
1800	9,62	10,60	11,60	12,60	13,61	14,63	15,66	16,69	17,73	18,77	20,88	23,00	27,29	31,62	35,99	40,38
1900	10,08	11,12	12,16	13,21	14,27	15,34	16,42	17,50	18,59	19,68	21,88	24,11	28,59	33,12	37,68	42,26
2000	10,55	11,63	12,72	13,82	14,93	16,05	17,17	18,30	19,44	20,58	22,88	25,20	29,88	34,60	39,35	44,11
2500	12,84	14,15	15,47	16,81	18,15	19,50	20,86	22,23	23,60	24,98	27,75	30,53	36,14	41,76	47,37	52,96
3000	15,06	16,60	18,14	19,70	21,27	22,84	24,43	26,01	27,61	29,21	32,41	35,63	42,07	48,48	54,83	
3500	17,23	18,98	20,74	22,51	24,29	26,08	27,87	29,67	31,47	33,28	36,89	40,49	47,67	54,75		
4000	19,35	21,30	23,27	25,25	27,23	29,22	31,21	33,20	35,20	37,19	41,16	45,12	52,93			
4500	21,42	23,57	25,73	27,90	30,08	32,25	34,43	36,60	38,77	40,94	45,24	49,50				
5000	23,44	25,78	28,13	30,49	32,84	35,19	37,54	39,88	42,21	44,52	49,11					

Table 7

BASIC PERFORMANCE IN kW FOR GOLD 14-40 mm WIDE

Diam.	124,78	129,23	133,69	142,60	151,52	160,43	169,34	178,25	196,08	213,90	231,73	249,55	267,38	285,21	303,03	320,86	356,51
rpm/Z	28	29	30	32	34	36	38	40	44	48	52	56	60	64	68	72	80
10	0,75	0,78	0,81	0,86	0,91	0,97	1,02	1,07	1,18	1,29	1,40	1,50	1,61	1,72	1,82	1,93	2,15
20	1,44	1,50	1,56	1,67	1,79	1,91	2,03	2,15	2,36	2,58	2,79	3,01	3,22	3,43	3,65	3,86	4,29
30	2,07	2,16	2,24	2,41	2,58	2,75	2,92	3,10	3,45	3,80	4,16	4,51	4,83	5,15	5,47	5,80	6,44
50	3,28	3,42	3,55	3,82	4,09	4,36	4,63	4,90	5,46	6,02	6,59	7,16	7,74	8,32	8,91	9,50	10,70
70	4,44	4,62	4,80	5,17	5,53	5,90	6,27	6,64	7,39	8,15	8,92	9,69	10,48	11,27	12,06	12,86	14,48
100	6,13	6,37	6,62	7,12	7,62	8,13	8,64	9,15	10,19	11,24	12,29	13,36	14,44	15,53	16,62	17,73	19,96
200	11,43	11,89	12,36	13,29	14,22	15,17	16,12	17,08	19,01	20,96	22,94	24,93	26,94	28,97	31,01	33,07	37,23
300	16,47	17,13	17,80	19,13	20,48	21,84	23,21	24,59	27,37	30,19	33,03	35,90	38,79	41,71	44,65	47,61	53,58
400	21,33	22,19	23,05	24,78	26,53	28,29	30,07	31,85	35,45	39,09	42,77	46,48	50,22	53,99	57,79	61,62	69,34
500	26,07	27,12	28,17	30,29	32,42	34,58	36,74	38,92	43,31	47,76	52,25	56,77	61,34	65,94	70,57	75,23	84,64
600	30,71	31,94	33,18	35,68	38,19	40,72	43,27	45,84	51,01	56,24	61,51	66,84	72,20	77,61	83,05	88,52	99,56
700	35,27	36,69	38,11	40,97	43,86	46,76	49,69	52,63	58,56	64,55	70,60	76,70	82,84	89,03	95,25	101,51	114,12
800	39,76	41,36	42,96	46,18	49,43	52,70	55,99	59,31	65,98	72,72	79,52	86,38	93,28	100,23	107,21	114,23	128,37
900	44,19	45,96	47,74	51,32	54,93	58,56	62,21	65,89	73,29	80,76	88,30	95,89	103,54	111,22	118,94	126,70	142,30
1000	48,56	50,51	52,46	56,39	60,35	64,34	68,34	72,37	80,49	88,69	96,94	105,25	113,61	122,02	130,45	138,92	155,94
1100	52,88	55,00	57,13	61,40	65,71	70,04	74,40	78,78	87,60	96,49	105,45	114,46	123,52	132,62	141,75	150,90	169,27
1200	57,16	59,44	61,74	66,36	71,00	75,68	80,38	85,10	94,61	104,19	113,83	123,53	133,26	143,03	152,83	162,64	182,30
1300	61,39	63,84	66,31	71,26	76,24	81,25	86,28	91,34	101,52	111,78	122,09	132,45	142,84	153,26	163,70	174,14	195,02
1400	65,58	68,20	70,82	76,10	81,42	86,76	92,12	97,51	108,35	119,26	130,22	141,23	152,25	163,30	174,35	185,39	207,43
1500	69,73	72,51	75,30	80,90	86,54	92,21	97,90	103,61	115,10	126,64	138,24	149,86	161,50	173,15	184,78	196,40	219,52
1600	73,84	76,78	79,73	85,65	91,61	97,60	103,61	109,64	121,75	133,92	146,13	158,36	170,59	182,80	195,00	207,15	231,29
1700	77,91	81,01	84,12	90,36	96,63	102,93	109,25	115,59	128,32	141,10	153,90	166,71	179,50	192,27	204,98	217,64	
1800	81,95	85,20	88,47	95,02	101,60	108,20	114,83	121,48	134,81	148,17	161,55	174,91	188,25	201,53	214,74		
1900	85,95	89,36	92,78	99,63	106,52	113,42	120,35	127,29	141,21	155,14	169,07	182,97	196,82	210,59			
2000	89,92	93,48	97,05	104,20	111,38	118,59	125,81	133,04	147,52	162,01	176,47	190,88	205,21	219,44			
2500	109,27	113,54	117,82	126,39	134,98	143,56	152,14	160,71	177,78	194,73							
3000	127,78	132,71	137,64	147,49	157,31	167,10	176,85	186,54									
3500	145,46	150,98	156,48	167,44	178,33	189,13											
4000	162,27	168,30	174,30	186,19													
4500	178,17																

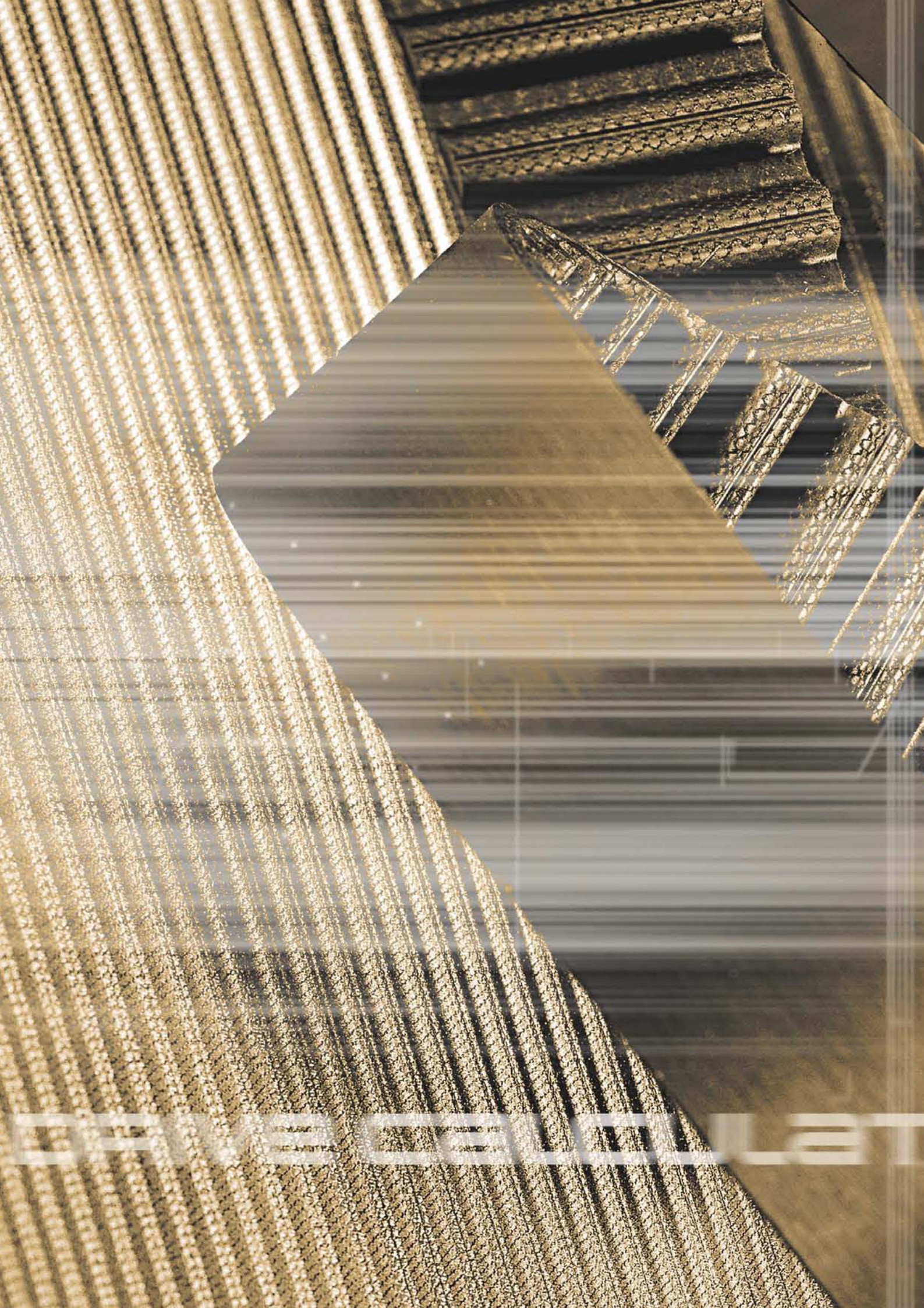

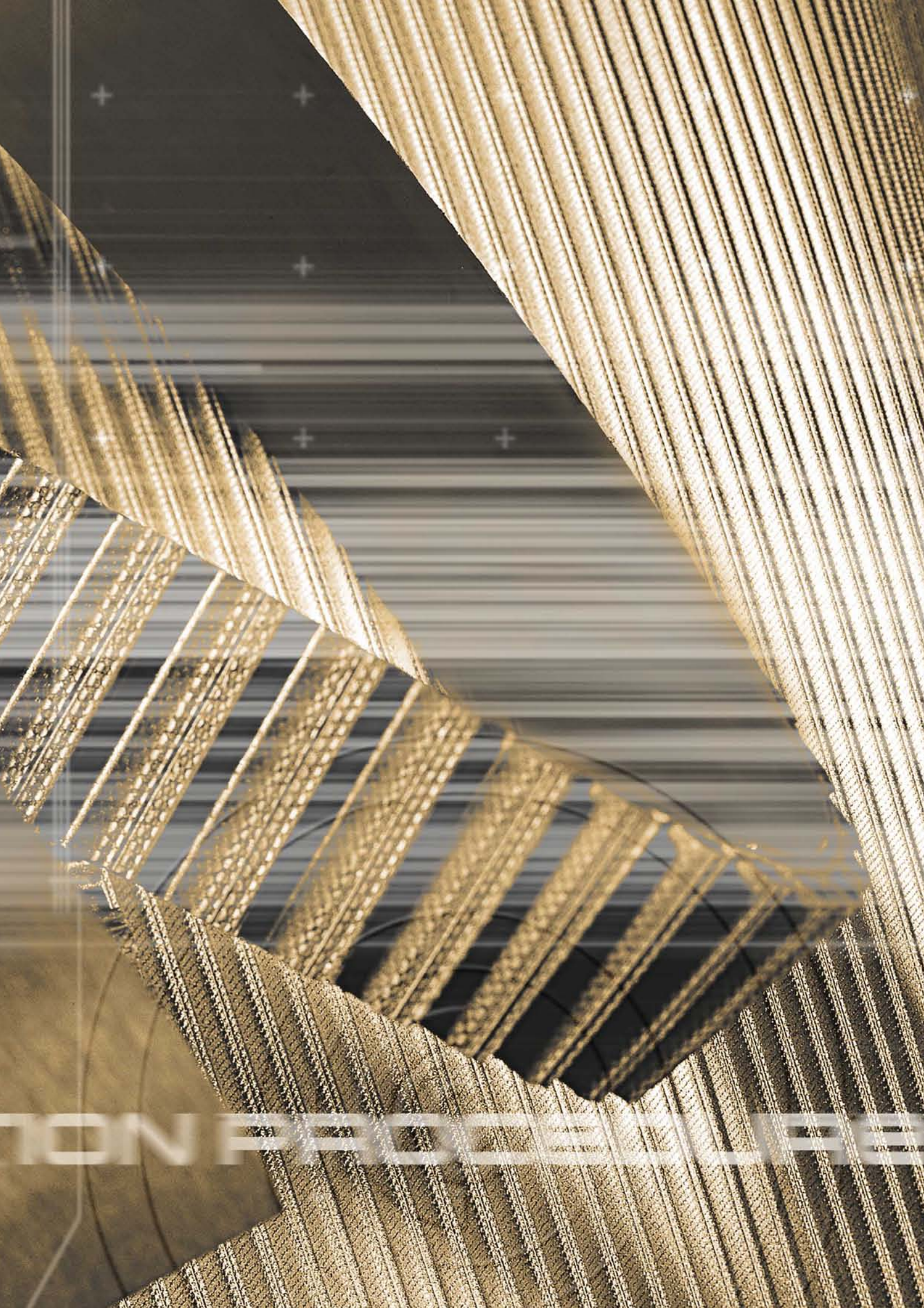

DRIVE CALCULATION PROCEDURE

BASIC DESIGN DATA

To select a New ISORAN RPP GOLD belt drive, you need to know the following details:

a) Prime mover:
type, power rating and rpm;

b) Driven machine:
type, power absorbed and rpm;

c) Service condition:
intermittent, periodic or continuous;

d) Layout data:
maximum pulley diameters, approximate pulley centre distance and tolerance.

STEP 1

CALCULATION OF POWER TRANSMITTED

a) From table 1 select the appropriate Service Factor Fs according to:

- the type of the driveN machine;
- the class of the prime mover;
- the service conditions (duty cycle category).

b) In case you are designing a drive with a speed up ratio **(i = n driveR/ n driveN <0.8)** you need to add at the above mentioned service factor Fs also the correction factor Cm as reported in Table 2:

TABLE 2 – Speed up factor Cm

$i = \frac{n\ driveR}{n\ driveN} = \frac{n_1}{n_2}$	C_m
≥0.8	0
0.79÷0.58	+0.1
0.57÷0.40	+0.2
0.39÷0.28	+0.3
<0.28	+0.4

c) Then the corrected service factor Cc is calculated as follows

$$Cc = Fs + Cm \quad [1]$$

d) The design power is obtained multiplying the input power by the corrected service factor:

$$Pc = P \times Cc \quad [2]$$

Table 1- Service Factor Fs

4. DRIVE N MACHINE	DRIVE R MACHINE								
	CLASS A			CLASS B			CLASS C		
	Peak overload up to 149% of rated load			Peak overload from 150% to 249% of rated load			Peak overload from 250% to 400% of rated load		
	• AC Motor: Asynchronous Star-Delta starting • DC Motor: Shunt wound • Internal combustion engines: 8 cyl. and up			• AC Motor: Asynchronous: Direct switch starting Synchronous: Normal torque • DC Motor: Compound wound • Internal combustion engines: 6 cyl.			• AC Motor: Single Phase: all Asynchronous: Double cage motor Synchronous: High torque • DC Motor: Series wound • Internal combustion engines: 4 cyl. or under • Hydraulic motors, line shafts		
	Duty cycle category								
	Intermittent service	Normal service	Continuous service	Intermittent service	Normal service	Continuous service	Intermittent service	Normal service	Continuous service
	< 8 hours daily	8 to 16 hours daily	>16 hours daily	< 8 hours daily	8 to 16 hours daily	>16 hours daily	< 8 hours daily	8 to 16 hours daily	>16 hours daily
Category 1: LOW UNIFORM LOAD/TORQUE Office equipment; Measuring equipment; Instrumentation; Display equipment; Laundry machinery: general; Line shaft; Agitators, mixers for liquid; Bakery machines. Conveyors: belt, light package, oven belt: ore, coal, sand.	1.3	1.4	1.5	1.5	1.6	1.7	1.7	1.8	1.9
Category 2: MEDIUM UNIFORM LOAD/TORQUE Woodworking equipment (light): lathes, band saws; Agitators, Mixers for semi-liquid; Screens: drum, conical; Machine Tools: lathes, drill presses, screw machines	1.4	1.5	1.6	1.6	1.7	1.8	1.8	1.9	2.0
Category 3: NOT UNIFORM LOAD/TORQUE Textile machinery: spinning frames, twisters warpers, warping machines; Woodworking equipment (heavy): jointer, circular saws, planes; Laundry machinery: extractors, washers; Machinery for rubber processing; Machine tools: grinders, milling machines, shapers; Conveyors: apron, bucket, elevator, screw; Centrifugal compressors; Hoists, Elevators; Generators and Exciters; Printing machinery; Fans, blowers: centrifugal, induced, draft exhausters, propeller, mine fans.	1.5	1.6	1.7	1.7	1.8	1.9	1.9	2.0	2.1
Category 4: SHOCK LOAD/TORQUE Textile machinery: dobbies, looms; Hammer mills; Paper machinery; Positive fan blowers; Reciprocating compressors; Machinery for pottery and earthenware; centrifuges.	1.7	1.8	1.9	1.9	2.0	2.1	2.1	2.2	2.3
Category 5: HIGH SHOCK LOAD Crushers: roll, ball, jaw; Mills: ball, rod, pebble, etc.; Reciprocating pumps; Saw mill equipment.	1.9	2.0	2.1	2.1	2.2	2.3	2.3	2.4	2.5

Note: These service factors are adequate for most belt drive applications. Service factors can be substituted only when the input data and working conditions are exactly known. In this case service factors may be adjusted based upon an understanding of the severity of actual drive operating conditions.

STEP 2

DETERMINE THE BELT PITCH

The belt pitch can be selected from graph 1, using:

- the design power (Pc) obtained in Step 1-d
- the rpm of the faster shaft (smaller pulley) in the drive.

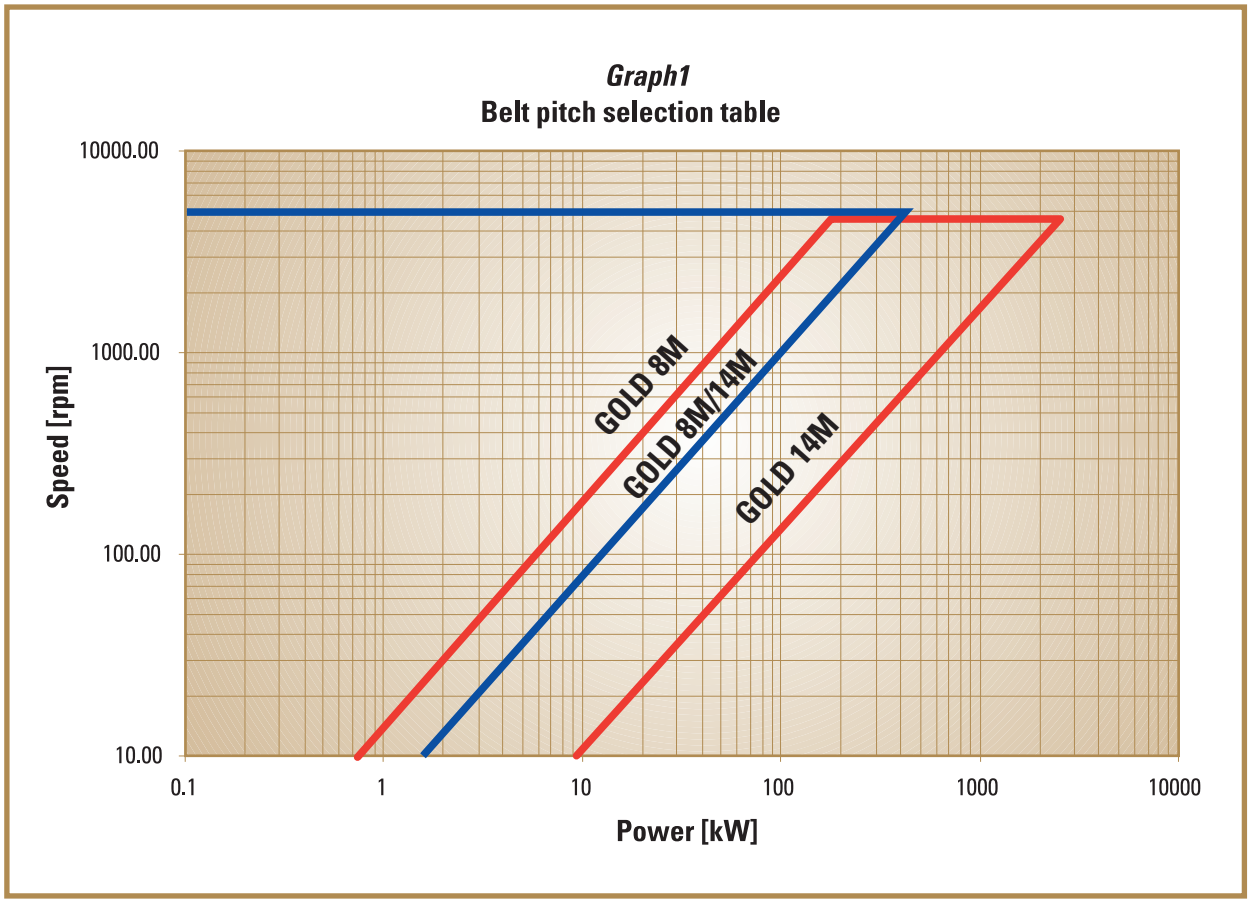

Locate the design power along the X-axis of the graph. Read up to the rpm of the faster shaft; the belt pitch indicated in the area surrounding the point of intersection which you located is the one you should use for your design.
If the point of intersection falls outside of any specific area, please contact your Megadyne technical Department.
If the point falls in the intersection area of 8mm and 14mm, a good drive can likely be designed using either belt pitch. We suggest to design the drive using both belt pitches and select the drive best meeting your size requirements or the most economical drive.

STEP 3

SELECTION OF BELT, PULLEYS AND CENTRE DISTANCES

a) Determine Speed Ratio (R) by dividing the rpm of the faster shaft by the rpm of the slower shaft:

$$R = \frac{n_{\text{faster shaft}}}{n_{\text{slower shaft}}} = \frac{n_S}{n_L} \qquad [3]$$

b) Refer to the centre distance selection table 3 (pag 38 to 61) to determine which pulley combinations give the desired speed ratio. The most suitable pulley combination can then be selected eliminating any pulley combination for which the required centre distance cannot be obtained with the nearest standard belt size.
If you know exactly the drive centre distance and the driver and driven diameters, you can calculate the belt pitch length with the following formula:

$$L_p = 2 \times I \times \cos\alpha + \frac{\pi \times (d_L + d_S)}{2} + \frac{\pi \times \alpha \times (d_L + d_S)}{180} \qquad [4]$$

Where:

L_p	=	Pitch belt length	[mm]
I	=	Centre distance	[mm]
d_L	=	Large pulley pitch diameter	[mm]
d_S	=	Small pulley pitch diameter	[mm]
α	=	$\text{arcsen}\left(\frac{d_L - d_S}{2 \times I}\right)$	[°]

c) Check that the ratio of the belt teeth number and the pulleys teeth is not an integer number. If this happens it's necessary to modify the drive where possible (centre distance, ratio, pulley diameter) otherwise the belt life could be strongly reduced.

d) The final pulley combination is then selected based upon the priorities required from the particular drive, in terms of flexibility in driven speed, centre distance, drive cost, etc...

STEP 4

DETERMINE THE ACTUAL POWER RATING Pba

The Actual Power rating is obtained by the following formula:

$$P_{ba} = P_b \times C_d \times K_1 \qquad [5]$$

Where:

P_{ba}	=	Actual power rating		[kW]
P_b	=	Basic performance	(Step 4 - c)	[kW]
C_d	=	Teeth in mesh correction factor	(Step 4 - a)	
K_1	=	Belt length correction factor	(Step 4 - b)	

a) Calculation of Cd factor

Power ratings listed in this handbook are based on a minimum of six teeth in mesh between the belt and the pulley. The ratings must be corrected for excessive tooth loading if there are less than six teeth in mesh. To determine the number of teeth in mesh on the smaller pulley you can use the following formula:

$$z_t = \left[0.5 - \left(\frac{4 \times p}{79 \times l} \right) \times (z_L - z_S) \right] \times z_s \qquad [6]$$

Where :

z_t	=	Number of teeth in mesh		
p	=	Belt/Pulle y pitch	(Step 2)	[mm]
l	=	Centre distance	(Step 3 - b)	[mm]
z_L	=	Number of teeth on large pulley	(Step 3 - b)	
z_S	=	Number of teeth on small pulley	(Step 3 - b)	

If Z_t is greater than 6, Cd =1
If Z_t is less than 6, the value of Cd must be obtained from table 4.

Table 4 - Teeth in mesh factor Cd

Number of teeth in mesh	Cd
6 or more	1.00
5	0.80
4	0.60
3	0.40
2	0.20

b) Calculation of K1 factor

The power ratings listed in this catalogue are based on specific belt lengths. To consider the influence of different belt lengths you have to use the corrective factor K1 in Table 5.

Table 5 - Belt length factor K1

GOLD 8		GOLD 14	
[mm]	Factor K1	[mm]	Factor K1
288	0.66	966	0.66
320	0.68	994	0.68
352	0.69	1092	0.71
360	0.70	1106	0.73
384	0.71	1190	0.75
408	0.72	1260	0.77
456	0.74	1288	0.79
480	0.75	1344	0.81
536	0.77	1400	0.83
544	0.78	1442	0.84
560	0.79	1568	0.86
600	0.80	1610	0.87
608	0.80	1764	0.89
632	0.81	1778	0.90
640	0.81	1890	0.92
680	0.83	1960	0.95
720	0.85	2100	0.96
800	0.88	2240	0.99
840	0.90	2310	1.00
880	0.91	2380	1.01
896	0.92	2450	1.02
920	0.93	2590	1.04
960	0.95	2660	1.06
1000	0.96	2800	1.08
1040	0.97	3150	1.11
1080	0.99	3360	1.14
1120	1.00	3500	1.16
1200	1.03	3850	1.19
1224	1.04	3920	1.22
1280	1.05	4326	1.25
1352	1.07	4578	1.29
1440	1.10	4956	1.34
1464	1.11		
1600	1.14		
1760	1.17		
1800	1.18		
2000	1.22		
2200	1.26		
2400	1.29		
2520	1.31		
2600	1.32		
2800	1.35		
3048	1.38		
3280	1.41		
3600	1.45		
4400	1.52		

c) From the basic performance tables (table 6,7, pag 14-15) the basic performance (Pb) for a particular belt pitch and width can be obtained in kW by selecting the value corresponding to the number of teeth and the rpm of the smaller pulley.

d) It's possible now to calculate the Actual Power Rating using the formula (5) in Step 4.

STEP 5

DETERMINE THE BELT WIDTH

a) At this stage we can calculate the belt width, which requires the width coefficient Cw to be calculated using the following formula:

$$C_w = \frac{P_c}{P_{ba}} \quad [7]$$

Where:

P_c	= Design power	(Step 1 - d)	[kW]
P_{ba}	= Basic performance	(Step 4 - d)	[kW]

b) Taking the coefficient Cw and referring to table 8, the appropriate belt width (w) can be obtained. It's recommended to select the next higher standard width (see table 8) or the widths in bold.

Table 8 - Belt width factor Cw

Belt width [mm]	GOLD 8	GOLD 14
10	0.500	
20	**1.000**	**0.500**
25	1.250	0.625
30	**1.500**	**0.750**
40	**2.000**	**1.000**
50	**2.500**	**1.250**
55	**2.750**	**1.375**
75	3.750	1.875
85	**4.250**	**2.125**
100		2.500
115		**2.875**
170		**4.250**

c) Once the belt width is defined, is possible to calculate the "Drive Safety Factor" as follows:

$$\sigma = \frac{\text{Effective Belt PowerRating}}{\text{Design Power}} = \frac{P_{ba} \times C_{w\,listed}}{P_c} \quad [8]$$

Where the Effective Belt Power Rating can be calculated multiplying the Actual Power Rating (Pba) by the belt width correction factor Cw listed in Table 8 corresponding to the selected belt width.
The Drive Safety Factor gives to the designer an indication of the maximum extra load that the drive can tolerate.

STEP 6

STATIC TENSION CALCULATION

When installing a New ISORAN RPP Gold, the belt tension is chosen so as to avoid:

- **TOOTH JUMP**. Assure that the belt is tensioned adequately to prevent tooth jump under the most severe load conditions that the drive will encounter.
- **EXTREMELY HIGH BELT TENSION.** Avoid extremely high tension which results in elevated noise levels and reduced belt and bearing life.

The required static tension is obtained by the following formula:

$$T_s = \frac{500 \times P \times K_m}{v} + m \times v^2 \qquad [9]$$

Where:

T_s	=	Static tension		[N]
P	=	Motor Power		[kW]
K_m	=	Class of motor factor	(step 6 - a)	
v	=	Belt linear speed	(step 6 - b)	[m/s]
m	=	Belt mass per unit length	(step 6 - c)	[Kg/m]

a) Determination of Km factor

To consider the influence of the peak torque of the motor used, you have to use the corrective factor Km as listed in Table 12.

Table 12 - Class of motor factor Km

Class A	Class B	Class C
1.35	1.5	1.75

b) Calculate the belt linear speed

To determine the belt linear speed of the transmission you can use the following formula:

$$v = \frac{\pi \times d_L \times n_L}{60000} \cong \frac{d_L \times n_L}{19098} \qquad [10]$$

Where:

v	=	Belt linear speed		[m/s]
d_L	=	Larger pulley pitch diameter	(step 3 - b)	[mm]
n_L	=	rpm of larger pulley		[rpm]
π	=	3,1416		

c) Determination of the belt mass (m)
The belt mass per unit length (m) for a particular belt pitch and width can be obtained from table 13.

Table 13 - belt mass per unit length m

Pitch [mm]	Belt width [mm]	m [Kg/m]
8	10	0.055
	20	0.110
	30	0.165
	50	0.275
	85	0.467
14	20	0.202
	40	0.404
	85	0.858
	115	1.161
	170	1.717

d) Static Tension calculation
It's possible now to calculate the static tension using the formula [9] described at the beginning of this Step.

Note: For unusual , shock or pulsating loads consult Megadyne application Engineering Department for guidance.

To calculate the static axial load F_a please refer to the following formula:

$$F_a = 2 \times T_s \times \text{sen}\,\frac{\beta}{2} \qquad [11]$$

STEP 7

STATIC TENSION CONTROL

There are two methods to measure the correct static tension:
- **a) The elongation method**
- **b) The vibration method**

a) The elongation method
The elongation procedure for determining the correct belt tension is based on measuring the force to deflect one span of the belt by a given amount (see figure below).

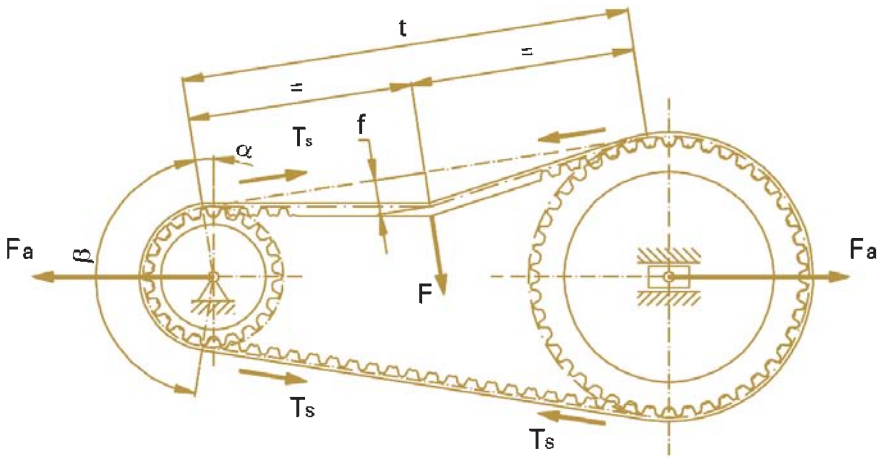

a1) Free span length calculation

Determine the free span length (t) of the belt. The value of (t) can be found using the following formula:

$$t = \sqrt{l^2 - \left(\frac{d_L - d_S}{2}\right)^2} \quad [12]$$

Where:

t	=	Free span length of the belt		[mm]
d_L	=	Large pulley pitch diameter	(step 3 - b)	[mm]
d_S	=	Smaller pulley pitch diameter	(step 3 - b)	[mm]
l	=	Centre distance	(step 3 - b)	[mm]

a2) Deflection forces

Calculate the minimum and maximum deflection forces by means of the following formulas:

$$F_{min} = \frac{T_s}{16} \quad [13] \qquad F_{max} = \frac{1.5 \times T_s}{16} \quad [14]$$

Where:

F_{min}	=	Minimum deflection force		[N]
F_{max}	=	Maximum deflection force		[N]
T_s	=	Base installation tension	(step 6 - [9])	[N]

a3) Deflection distance

Calculate the deflection distance by means of the following formula:

$$f = \frac{t}{64} \quad [15]$$

Where:

f	=	Deflection distance		[mm]
t	=	Free span length of the belt	(step 7 - a1)	[mm]

- With the belt installed on the drive and tensioned to a level required to eliminate all slack in the system (snug fit) begin the tensioning procedure. At the centre of the span (t), apply a force perpendicular to the span so that the belt is deflected by the deflection distance (f) from its normal position. Make sure that at least one pulley is free to rotate. For belts wider than 50 mm, place a section of rigid material such as a length of key stock across the belt and apply the force through this rigid member to prevent belt distortion and insure proper tensioning.

- Compare the deflection force with the range of forces calculated in anterior steps.

  - If this is less than the minimum deflection force, the belt should be tightened.
  - If this is greater than the maximum deflection force, the belt should be slackened slightly.

b) The vibration method

An alternative procedure to measure the tension of the belt is to use a Belt Tension Gauging Equipment. This device consists of a small sensing head which is held across the belt to be measured. The belt is then tapped to induce the belt to vibrate at its natural frequency. The vibrations are detected and the frequency of vibration is then displayed on the measuring unit.

The relation between belt static tension (Ts) and frequency of vibration (f) may be calculated using the following formula:

$$T_s = 4 \times m \times t^2 \times fr^2 \qquad [16]$$

Where:

T_s	=	Static tension	(step 6 - [9])	[N]
m	=	Belt mass per unit length	(step 6 - c)	[kg/m]
fr	=	Frequency of vibration in Hertz		[Hz]
t	=	Free belt span length in meters	(step 7 - a1)	[m]

EXAMPLE: BASIC DESIGN DATA

Motor Power DriveR rpm Class motor	P = 5 kW n_1 = 2000 rpm Class C	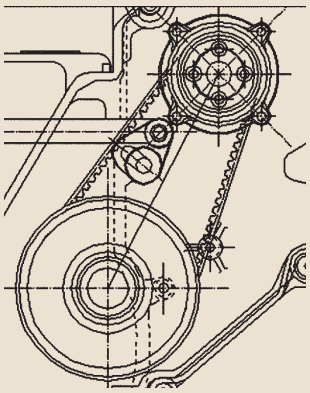
Application Absorbed power DriveN rpm	Textile machine Unknown (assume 5 kW) n_2 = 1000 rpm	
Type of driveN machine Working hours	Not uniform torque (Category 3) 8-16 hours/day	
Approximate centre distance Maximum pulley diameter	630 - 640 mm 200 mm	

Step 1. Calculation of power transmitted

Step 1a. Service Factor	**Data**	**Result**
Fs from table 1, page 19	Category 3 driveN machine Motor class C 8-16 working hours	Fs = 2.0
Step 1b. Speed up Factor	**Data**	**Result**
Cm from table 2, page 18	$i = \frac{n_{driveR}}{n_{driven}} = \frac{n_1}{n_2} = \frac{2000}{1000} = 2$	Cm = 0.0
Step 1c.Corrected service factor	**Data**	**Result**
	Fs from step 1-a Cm from step 1-b	$C_c = 2.0 + 0 = 2.0$
Step 1d. Design power	**Data**	**Result**
	P from basic design data Cc from step 1-c	$P_c = 5 \times 2.0 = 10$ kW

Step 2. Belt pitch determination

Step 2. Belt pitch	**Data**	**Result**
Pitch of the belt from graph1 page 20	Pc from step 1-d rpm faster shaft from basic design data	Belt pitch = 8 mm

Step 3 Selection of belt, pulleys and centre distance

Step 3a. Speed Ratio	**Data**	**Result**
$R = \frac{n_{faster\ shaft}}{n_{slower\ shaft}} = \frac{n_S}{n_L}$ [3]	rpm faster shaft from basic design data rpm slower shaft from basic design data	$R = \frac{2000}{1000} = 2$
Step 3b. Belt, pulleys and centre distance Z_S, Z_L, d_S , d_L, I, L_p, Z_b from table 3, from pag. 38 to pag 49	**Data** Approximate centre distance from basic design data	**Result** Option 1 Z_S = 28 teeth, d_S = 71.30 mm Z_L = 56 teeth, d_L = 142.60 mm Centre distance = 630.993mm Pitch belt length = 1600 mm Z_b = 200 teeth R from step 3-a Option 2 Z_S = 40 teeth, d_S = 101.86 mm Z_L = 80 teeth, d_L = 203.72 mm Centre distance = 637.966 mm Pitch belt length = 1760 mm Z_b = 220 teeth
Step 3c. Check belt/pulleys teeth ratio is an integer $\frac{Z_b}{Z_S}$ $\frac{Z_b}{Z_L}$	**Data** Z_S, Z_L, Z_b from step 3-b	**Result** Option 1 $\frac{z_b}{z_S} = \frac{200}{28} = 7.14$ $\frac{z_b}{z_L} = \frac{200}{56} = 3.57$ Option 2 $\frac{z_b}{z_S} = \frac{220}{40} = 5.5$ $\frac{z_b}{z_L} = \frac{220}{80} = 2.75$
Step 3d. Check options that match the requirements in term of dimensional parameters	**Data** Maximum pulley diameter from basic design data	**Result** Option 1 according with the dimensional requirements (max pulley diameter = 200 mm)

Step 4. Actual power rating determination

Step 4a. Teeth in mesh factor	Data	Result
Cd from table 4, page 22	$z_t = \left[0.5 - \left(\frac{4 \times p}{79 \times l}\right) \times (z_L - z_S)\right] \times z_S$ [6] p from step 2 Z_S, Z_L, l from step 3-b $z_t = \left[0.5 - \left(\frac{4 \times 8}{79 \times 630{,}993}\right) \times (56 - 28)\right] \times 28 = 13.5$	Cd = 1.0
Step 4b. Belt length factor	**Data**	**Result**
K1 from table 5, page 23	Lp from step 3-b	K1 = 1.14
Step 4c. Basic performance	**Data**	**Result**
Pb from table 6, page 14	p from step 2 Z_S from step 3-b rpm faster shaft from basic design data	Pb = 13.82 kW
Step 4d. Actual power rating	**Data**	**Result**
$P_{ba} = P_b \times C_d \times K_1$ [5]	C_d from step 4-a K_1 from step 4-b P_b from step 4-c	$P_{ba} = 13.82 \times 1 \times 1.14 = 15.75$ kW

Step 5 Belt width determination

Step 5a. Belt width factor	Data	Result
$C_w = \frac{P_c}{P_{ba}}$ [7]	P_c from step 1-d P_{ba} from step 4-d	$C_{lw} = \frac{10}{15.75} = 0.63$
Step 5b. Belt width	**Data**	**Result**
Belt width from table 8, page 24	C_w from step 5-a	w = 20 mm
Step 5c. Drive service factor	**Data**	**Result**
$\sigma = \frac{P_{ba} \times C_{w\,listed}}{P_c}$ [8]	P_{ba} from step 4-d P_c from step 1-d $C_{wlisted}$ from table 8	$\sigma = \frac{15.75 \times 1}{10} = 1.57$

Step 6 Static tension calculation

Step 6a. Class of motor factor	Data	Result
Km from table 12, on page 25	Class of motor from basic design data	Km = 1.75
Step 6b. Belt linear speed	**Data**	**Result**
$v = \frac{\pi \times d_L \times n_L}{60000}$ [10]	rpm on slower shaft from basic design data d_L from step 3-b	$v = \frac{\pi \times 142.60 \times 1000}{60000} = 7.47$ m/s
Step 6c. Belt mass per unit length	**Data**	**Result**
m from table 13, on page 26	w from step 5-b pitch from step 2	m = 0.110 kg/m
Step 6d. Static tension	**Data**	**Result**
$T_s = \frac{500 \times P \times K_m}{v} + m \times v^2$ [9]	P from basic design data Km from step 6-a v from step 6-b m from step 6-c	$T_s = \frac{500 \times 5 \times 1.75}{7.47} + 0.110 \times 7.47^2 = 592$ N

Step 7 Static tension control

Step 7a1. Free span length	Data	Result
$t = \sqrt{l^2 - \left(\frac{d_L - d_S}{2}\right)^2}$ [12]	l, d_S, d_L from step 3-b	$t = \sqrt{630.993^2 - \left(\frac{142.60 - 71.30}{2}\right)^2} = 629.99$ mm
Step 7a2. Deflection forces	**Data**	**Result**
$F_{min} = \frac{T_s}{16}$ [13] $F_{max} = \frac{1.5 \times T_s}{16}$ [14]	Ts from step 6-d	$F_{min} = \frac{592}{16} = 37.0$ N $F_{max} = \frac{1.5 \times 592}{16} = 55.5$ N
Step 7a3. Deflection distance	**Data**	**Result**
$f = \frac{t}{64}$ [15]	t from step 7-a1	$f = \frac{629.99}{64} = 9.84$ mm
Step 7b. Frequency	**Data**	**Result**
$fr = \sqrt{\frac{T_s \times 10^6}{4 \times m \times t^2}}$ [16]	Ts from step 6-d m from step 6-c t from step 7-a1	$fr = \sqrt{\frac{592 \times 10^6}{4 \times 0.110 \ 629.99^2}} = 58.22$ Hz

SYMBOLS, UNITS, TERMS.

Symbol	Description	Unit
a	Free span length angle	[°]
ß	Wrap angle on small pulley	[°]
d_1	DriveR pulley pitch diameter	[mm]
d_2	DriveN pulley pitch diameter	[mm]
Fadyn	Dynamic axial load	[N]
F_1	Load on bearing	[N]
F_2	Load on bearing	[N]
L_1	Bearing/pulley distance	[mm]

Symbol	Description	Unit
L_2	Bearing distance	[mm]
M_1	Motor torque	[Nm]
M_2	Absorbed torque	[Nm]
P	Motor power	[kW]
Pa	Absorbed power	[kW]
T_1	Tight side tension	[N]
T_2	Slack side tension	[N]

Figure 3

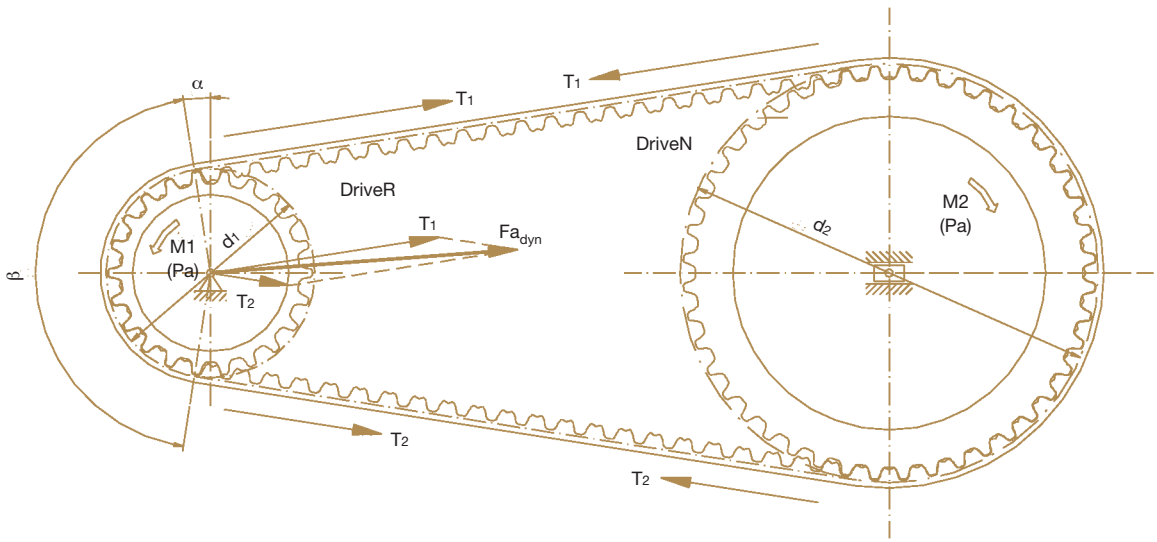

Figure 4

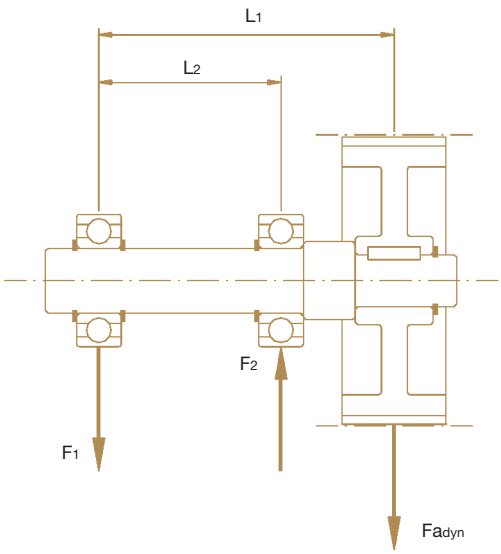

Figure 5

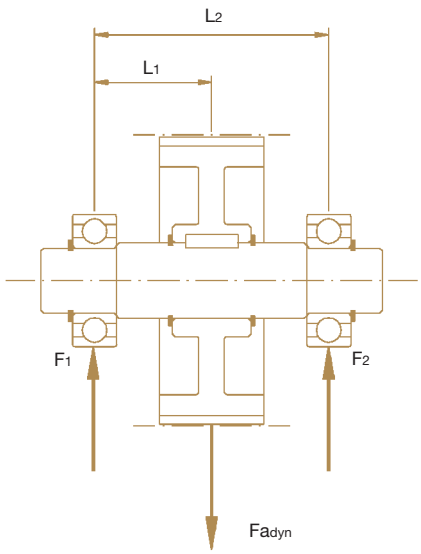

CALCULATION OF THE DYNAMIC AXIAL LOAD Fa_{dyn} AND FORCES ON BEARINGS.

The dynamic axial load is obtained by a vector addition between the tension in the tight span (T_1) and the slack span (T_2) as shown in the figure 3. The formula to calculate the dynamic axial load is the following:

$$Fa_{dyn} = \sqrt{T_1^2 + T_2^2 - 2 \times T_1 \times T_2 \times \cos\beta} = \sqrt{\frac{T_e^2}{2} + 2 \times T_s^2 - 2 \times \cos\beta \times \left(T_s^2 - \frac{T_e^2}{4}\right)}$$

Where:

Te	=	Effective belt tension (T_1-T_2)	[N]
Ts	=	Static tension	[N]
ß	=	Wrap angle on small pulley	[°]

a) The effective belt tension is obtained by dividing the motor power by the belt linear speed:

Where:

v	=	Belt linear speed (step 6b)	[m/s]
P	=	Motor power	[kW]

$$T_e = \frac{1000 \times P}{v}$$

b) The wrap angle on the small pulley can be calculated by using the following formula:

Where:

d_L	=	pitch diameter of large pulley	[mm]
d_S	=	pitch diameter of small pulley	[mm]
I	=	Centre distance	[mm]

$$\beta = 180 - 2 \times \text{arcsen}\left(\frac{d_L - d_S}{2 \times I}\right)$$

c) It is possible now to calculate the dynamic axial load Fa_{dyn} using formula described at the beginning of this step.

d) Knowing the load on the axis, you can calculate the load on each bearing by using following formulas:

- In case of using a system like figure 4

$$F_1 = \frac{L_1 - L_2}{L_2} \times Fa_{dyn} \qquad F_2 = \frac{L_1}{L_2} \times Fa_{dyn}$$

- In case of using a system like figure 5

$$F_1 = \frac{L_2 - L_1}{L_2} \times Fa_{dyn} \qquad F_2 = \frac{L_1}{L_2} \times Fa_{dyn}$$

Where:

F_1	=	load on bearing	[N]
F_2	=	load on bearing	[N]
L_1	=	Bearing/pulley distance	[mm]
L_2	=	Bearings distance	[mm]
Fa_{dyn}	=	Dynamic axial load	[N]

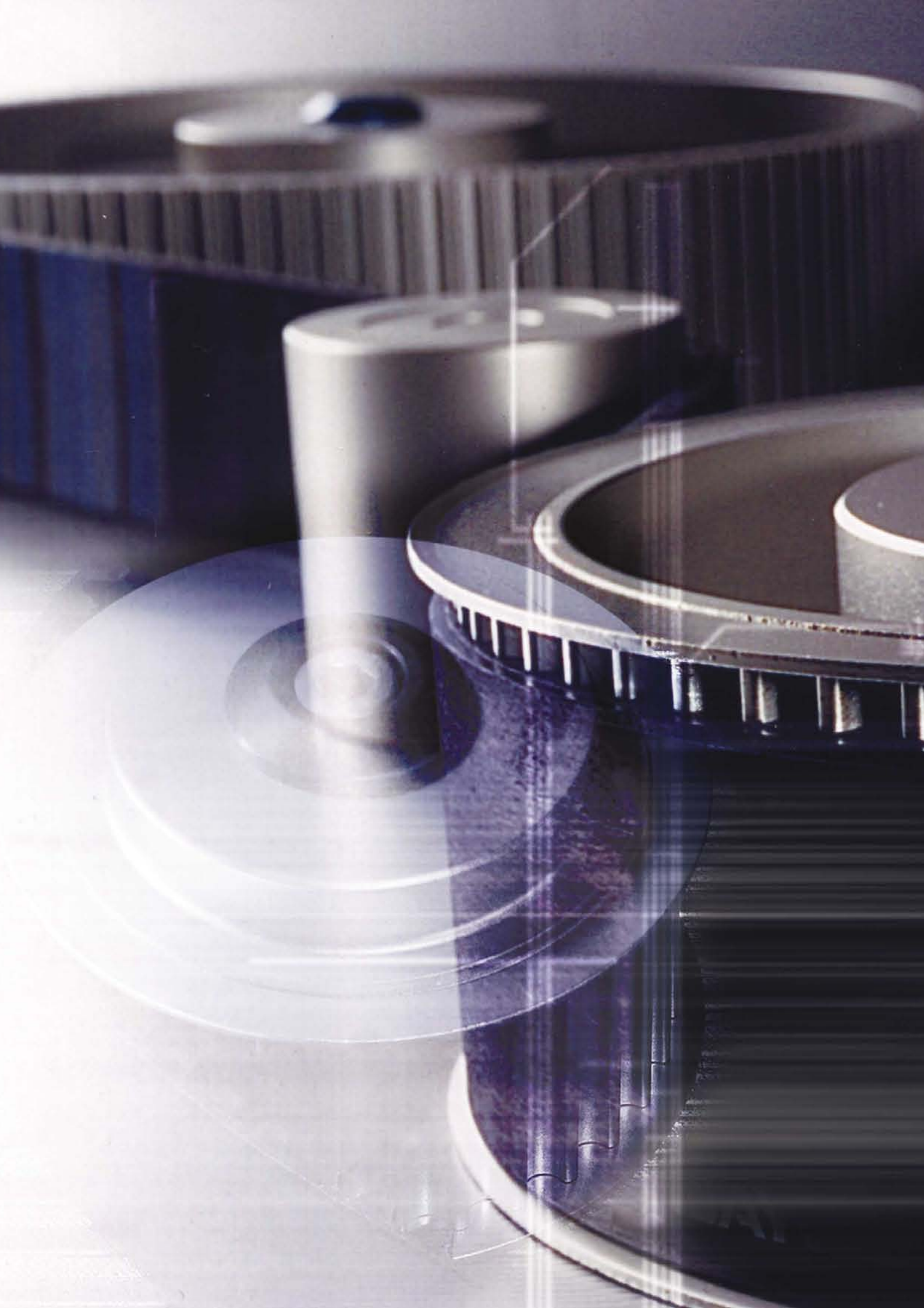

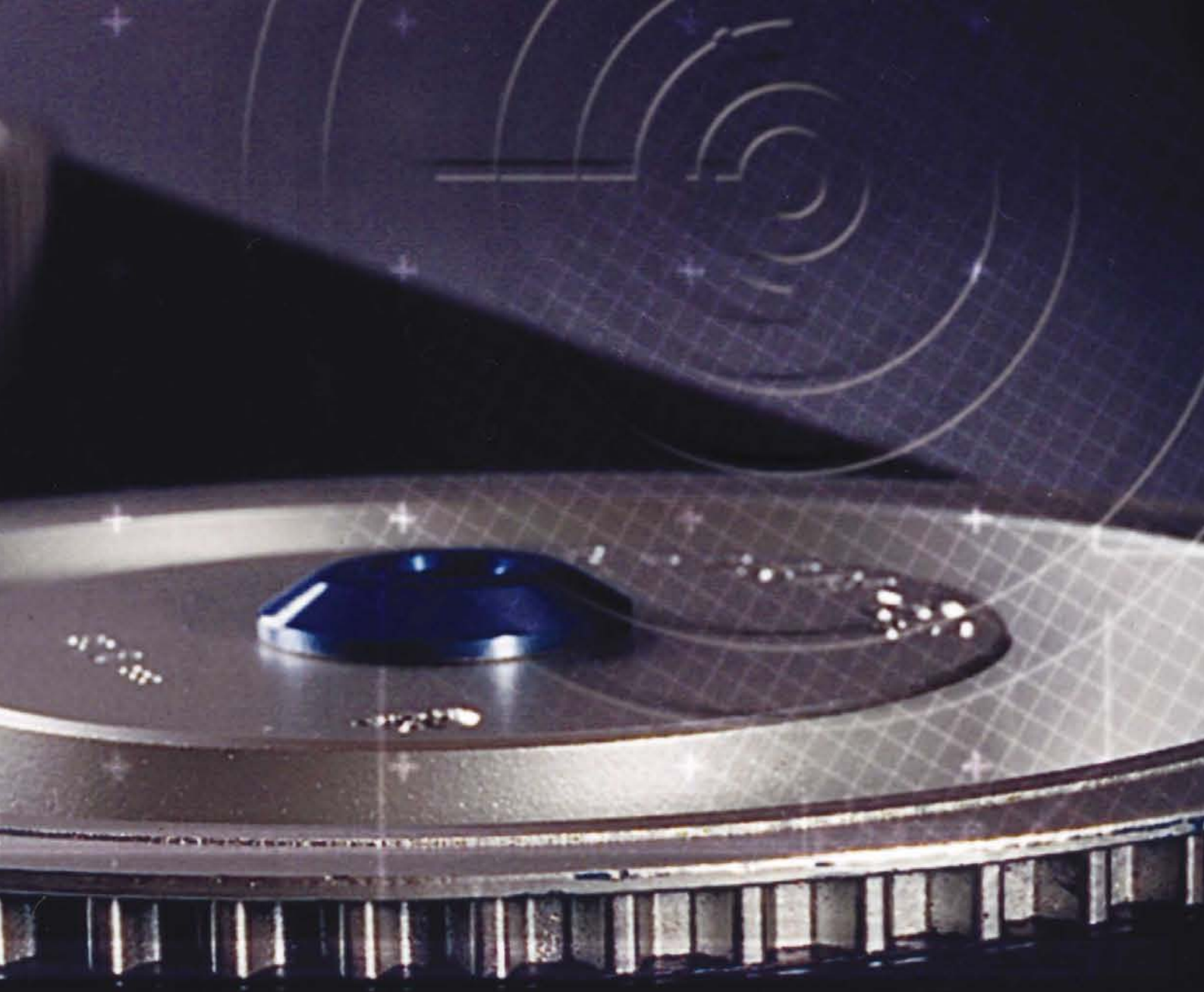

Table 3

PULLEYS					Design centre distance (mm)										
R	z1	d1	z2	d2	belt: 288 RPP8 n° of teeth 36	belt: 320 RPP8 n° of teeth 40	belt: 352 RPP8 n° of teeth 44	belt: 360 RPP8 n° of teeth 45	belt: 384 RPP8 n° of teeth 48	belt: 408 RPP8 n° of teeth 51	belt: 456 RPP8 n° of teeth 57	belt: 480 RPP8 n° of teeth 60	belt: 536 RPP8 n° of teeth 67	belt: 544 RPP8 n° of teeth 68	belt: 560 RPP8 n° of teeth 70
1,00	80	203,72	80	203,72											
	72	183,35	72	183,35											
	64	162,97	64	162,97											
	56	142,60	56	142,60											
	48	122,23	48	122,23											
	44	112,05	44	112,05											
	40	101,86	40	101,86									108,000	112,000	120,000
	38	96,77	38	96,77									116,000	120,000	128,000
	36	91,67	36	91,67								96,000	124,000	128,000	136,000
	34	86,58	34	86,58							92,000	104,000	132,000	136,000	144,000
	32	81,49	32	81,49							100,000	112,000	140,000	144,000	152,000
	30	76,39	30	76,39						84,000	108,000	120,000	148,000	152,000	160,000
	28	71,30	28	71,30					80,000	92,000	116,000	128,000	156,000	160,000	168,000
	26	66,21	26	66,21			72,000	76,000	88,000	100,000	124,000	136,000	164,000	168,000	176,000
	24	61,12	24	61,12		64,000	80,000	84,000	96,000	108,000	132,000	144,000	172,000	176,000	184,000
	22	56,02	22	56,02	56,000	72,000	88,000	92,000	104,000	116,000	140,000	152,000	180,000	184,000	192,000
1,05	38	96,77	40	101,86									111,971	115,972	123,974
1,06	36	91,67	38	96,77									119,973	123,974	131,975
	34	86,58	36	91,67								99,968	127,975	131,975	139,977
	32	81,49	34	86,58							95,966	107,970	135,976	139,977	147,978
1,07	30	76,39	32	81,49						79,959	103,969	115,972	143,977	147,978	155,979
1,07	28	71,30	30	76,39					75,957	87,963	111,971	123,974	151,979	155,979	163,980
1,08	26	66,21	28	71,30				71,955	83,961	95,966	119,973	131,975	159,980	163,980	171,981
	24	61,12	26	66,21			75,957	79,959	91,965	103,969	127,975	139,977	167,981	171,981	179,982
1,09	44	112,05	48	122,23											
	22	56,02	24	61,12		67,952	83,961	87,963	99,968	111,971	135,976	147,978	175,982	179,982	187,983
1,10	40	101,86	44	112,05											111,884
1,11	72	183,35	80	203,72											
	36	66,21	40	101,86							75,829	87,852	115,888	119,892	127,899
1,12	34	86,58	38	96,77								95,865	123,895	127,899	135,905
1,13	80	203,72	90	229,18											
	64	162,97	72	183,35											
	32	81,49	36	91,67							91,859	103,875	131,902	135,905	143,910
	30	76,39	34	86,58							99,870	111,884	139,907	143,910	151,915
1,14	56	142,60	64	162,97											
	28	71,30	32	81,49						83,845	107,880	119,892	147,912	151,915	159,919
1,15	26	66,21	30	76,39					79,838	91,859	115,888	127,899	155,917	159,919	167,923
1,16	38	96,77	44	112,05										107,729	115,748
1,17	48	122,23	56	142,60											
	24	61,12	28	71,30			71,819	75,829	87,852	99,870	123,895	135,905	163,921	167,923	175,926
1,18	34	86,58	40	101,86									119,756	123,764	131,779
	22	56,02	26	66,21		63,797	79,838	83,845	95,865	107,880	131,902	143,910	171,925	175,926	183,929
1,19	32	81,49	38	96,77								99,707	127,772	131,779	139,791
1,20	40	101,86	48	122,23											
	30	76,39	36	91,67							95,695	107,729	135,785	139,791	147,803
1,21	28	71,30	34	86,58						79,633	103,719	115,748	143,797	147,803	155,813
1,22	36	91,67	44	112,05									107,517	111,535	119,566
1,23	26	66,21	32	81,49					75,614	87,667	111,739	123,764	151,808	155,813	163,822
1,25	72	183,35	90	229,18											
	64	162,97	80	203,72											
	32	81,49	40	101,86								95,456	123,580	127,593	135,617
	24	61,12	30	76,39				71,592	83,651	95,695	119,756	131,779	159,817	163,822	171,830
1,26	38	96,77	48	122,23											
1,27	44	112,05	56	142,60											
	30	76,39	38	96,77							91,432	103,498	131,606	135,617	143,639
	22	56,02	28	71,30			75,614	79,633	91,682	103,719	127,772	139,791	167,826	171,830	179,838
1,29	56	142,60	72	183,35											
	34	86,58	44	112,05									111,271	115,296	123,342
	28	71,30	36	91,67							99,478	111,535	139,628	143,639	151,658
1,31	26	66,21	34	86,58						83,377	107,517	119,566	147,649	151,658	159,675
1,33	48	122,23	64	162,97											
	36	91,67	48	122,23											110,946
	30	76,39	40	101,86								99,182	127,363	131,383	139,418
	24	61,12	32	81,49					79,345	91,432	115,551	127,593	155,667	159,675	167,691
1,36	28	71,30	38	96,77							95,147	107,243	135,401	139,418	147,450
	22	56,02	30	76,39			71,271	75,310	87,406	99,478	123,580	135,617	163,683	167,691	175,705

Table 3

Design centre distance (mm)											PULLEYS				
belt: 600 RPP8 n° of teeth 75	belt: 608 RPP8 n° of teeth 76	belt: 632 RPP8 n° of teeth 79	belt: 640 RPP8 n° of teeth 80	belt: 680 RPP8 n° of teeth 85	belt: 720 RPP8 n° of teeth 90	belt: 800 RPP8 n° of teeth 100	belt: 840 RPP8 n° of teeth 105	belt: 880 RPP8 n° of teeth 110	belt: 896 RPP8 n° of teeth 112	belt: 920 RPP8 n° of teeth 115	d2	z2	d1	z1	R
											203,72	80	203,72	80	1,00
											183,35	72	183,35	72	
							164,000	184,000	192,000	204,000	162,97	64	162,97	64	
						176,000	196,000	216,000	224,000	236,000	142,6	56	142,60	56	
		124,000	128,000	148,000	168,000	208,000	228,000	248,000	256,000	268,000	122,23	48	122,23	48	
124,000	128,000	140,000	144,000	164,000	184,000	224,000	244,000	264,000	272,000	284,000	112,05	44	112,05	44	
140,000	144,000	156,000	160,000	180,000	200,000	240,000	260,000	280,000	288,000	300,000	101,86	40	101,86	40	
148,000	152,000	164,000	168,000	188,000	208,000	248,000	268,000	288,000	296,000	308,000	96,77	38	96,77	38	
156,000	160,000	172,000	176,000	196,000	216,000	256,000	276,000	296,000	304,000	316,000	91,67	36	91,67	36	
164,000	168,000	180,000	184,000	204,000	224,000	264,000	284,000	304,000	312,000	324,000	86,58	34	86,58	34	
172,000	176,000	188,000	192,000	212,000	232,000	272,000	292,000	312,000	320,000	332,000	81,49	32	81,49	32	
180,000	184,000	196,000	200,000	220,000	240,000	280,000	300,000	320,000	328,000	340,000	76,39	30	76,39	30	
188,000	192,000	204,000	208,000	228,000	248,000	288,000	308,000	328,000	336,000	348,000	71,3	28	71,30	28	
196,000	200,000	212,000	216,000	236,000	256,000	296,000	316,000	336,000	344,000	356,000	66,21	26	66,21	26	
204,000	208,000	220,000	224,000	244,000	264,000	304,000	324,000	344,000	352,000	364,000	61,12	24	61,12	24	
212,000	216,000	228,000	232,000	252,000	272,000	312,000	332,000	352,000	360,000	372,000	56,02	22	56,02	22	
143,977	147,978	159,980	163,980	183,982	203,984	243,987	263,988	283,989	291,989	303,989	101,86	40	96,77	38	1,05
151,979	155,979	167,981	171,981	191,983	211,985	251,987	271,988	291,989	299,989	311,990	96,77	38	91,67	36	1,06
159,980	163,980	175,982	179,982	199,984	219,985	259,988	279,988	299,989	307,989	319,990	91,67	36	86,58	34	
167,981	171,981	183,982	187,983	207,984	227,986	267,988	287,989	307,989	315,990	327,990	86,58	34	81,49	32	
175,982	179,982	191,983	195,983	215,985	235,986	275,988	295,989	315,990	323,990	335,990	81,49	32	76,39	30	1,07
183,982	187,983	199,984	203,984	223,986	243,987	283,989	303,989	323,990	331,990	343,991	76,39	30	71,30	28	1,07
191,983	195,983	207,984	211,985	231,986	251,987	291,989	311,990	331,990	339,990	351,991	71,3	28	66,21	26	1,08
199,984	203,984	215,985	219,985	239,986	259,988	299,989	319,990	339,990	347,991	359,991	66,21	26	61,12	24	
	119,892	131,902	135,905	155,917	175,926	215,940	235,945	255,949	263,951	275,953	122,23	48	112,05	44	1,09
207,984	211,985	223,986	227,986	247,987	267,988	307,989	327,990	347,991	355,991	367,991	61,12	24	56,02	22	
131,902	135,905	147,912	151,915	171,925	191,932	231,944	251,949	271,952	279,954	291,956	112,05	44	101,86	40	1,10
											203,72	80	183,35	72	1,11
147,912	151,915	163,921	167,923	187,931	207,938	247,948	267,952	287,955	295,956	307,958	101,86	40	66,21	36	
155,917	159,919	171,925	175,926	195,934	215,940	255,949	275,953	295,956	303,957	315,959	96,77	38	86,58	34	1,12
											229,18	90	203,72	80	1,13
									175,705	187,724	183,35	72	162,97	64	
163,921	167,923	179,928	183,929	203,936	223,942	263,951	283,954	303,957	311,958	323,960	91,67	36	81,49	32	
171,925	175,926	187,931	191,932	211,939	231,944	271,952	291,956	311,958	319,959	331,961	86,58	34	76,39	30	
						159,675	179,711	199,740	207,750	219,764	162,97	64	142,60	56	1,14
179,928	183,929	195,934	199,935	219,941	239,946	279,954	299,957	319,959	327,960	339,962	81,49	32	71,30	28	
187,931	191,932	203,936	207,938	227,943	247,948	287,955	307,958	327,960	335,961	347,963	76,39	30	66,21	26	1,15
135,785	139,791	151,808	155,813	175,834	195,851	235,876	255,886	275,894	283,897	295,901	112,05	44	96,77	38	1,16
					151,658	191,729	211,755	231,776	239,784	251,794	142,6	56	122,23	48	1,17
195,934	199,935	211,939	215,940	235,945	255,949	295,956	315,959	335,961	343,962	355,964	71,3	28	61,12	24	
151,808	155,813	167,826	171,830	191,848	211,862	251,884	271,893	291,900	299,903	311,906	101,86	40	86,58	34	1,18
203,936	207,938	219,941	223,942	243,947	263,951	303,957	323,960	343,962	351,963	363,964	66,21	26	56,02	22	
159,817	163,822	175,834	179,838	199,854	219,867	259,888	279,896	299,903	307,905	319,909	96,77	38	81,49	32	1,19
123,580	127,593	139,628	143,639	163,683	183,718	223,768	243,787	263,803	271,809	283,817	122,23	48	101,86	40	1,20
167,826	171,830	183,841	187,845	207,860	227,872	267,891	287,899	307,905	315,908	327,911	91,67	36	76,39	30	
175,834	179,838	191,848	195,851	215,865	235,876	275,894	295,901	315,908	323,910	335,913	86,58	34	71,30	28	1,21
139,628	143,639	155,667	159,675	179,711	199,740	239,784	259,800	279,815	287,820	299,827	112,05	44	91,67	36	1,22
183,841	187,845	199,854	203,857	223,870	243,880	283,897	303,904	323,910	331,912	343,915	81,49	32	66,21	26	1,23
											229,18	90	183,35	72	1,25
											203,72	80	162,97	64	
155,667	159,675	171,698	175,705	195,735	215,760	255,797	275,812	295,825	303,829	315,836	101,86	40	81,49	32	
191,848	195,851	207,860	211,862	231,874	251,884	291,900	311,906	331,912	339,914	351,917	76,39	30	61,12	24	
127,363	131,383	143,435	147,450	167,516	187,568	227,644	247,673	267,697	275,706	287,718	122,23	48	96,77	38	1,26
				139,160	159,267	199,414	219,468	239,513	247,528	259,550	142,6	56	112,05	44	1,27
163,683	167,691	179,711	183,718	203,745	223,768	263,803	283,817	303,829	311,834	323,840	96,77	38	76,39	30	
199,854	203,857	215,865	219,867	239,878	259,888	299,903	319,909	339,914	347,916	359,919	71,3	28	56,02	22	
								182,864	190,912	202,977	183,35	72	142,60	56	1,29
143,435	147,450	159,492	163,504	183,558	203,602	243,667	263,693	283,714	291,722	303,733	112,05	44	86,58	34	
171,698	175,705	187,724	191,729	211,755	231,776	271,809	291,822	311,834	319,838	331,844	91,67	36	71,30	28	
179,711	183,718	195,735	199,740	219,764	239,784	279,815	299,827	319,838	327,842	339,847	86,58	34	66,21	26	1,31
						174,812	194,935	215,034	223,069	235,117	162,97	64	122,23	48	1,33
131,109	135,135	147,206	151,228	171,318	191,390	231,496	251,536	271,570	279,582	291,600	122,23	48	91,67	36	
159,492	163,504	175,538	179,548	199,594	219,631	259,688	279,710	299,730	307,737	319,746	101,86	40	76,39	30	
187,724	191,729	203,745	207,750	227,772	247,791	287,820	307,831	327,842	335,846	347,851	81,49	32	61,12	24	
167,516	171,527	183,558	187,568	207,609	227,644	267,697	287,718	307,737	315,743	327,753	96,77	38	71,30	28	1,36
195,735	199,740	211,755	215,760	235,780	255,797	295,825	315,836	335,846	343,849	355,854	76,39	30	56,02	22	

Table 3

	PULLEYS				Design centre distance (mm)											
R	z1	d1	z2	d2	belt: 960 RPP8 n° of teeth 120	belt: 1000 RPP8 n° of teeth 125	belt: 1040 RPP8 n° of teeth 130	belt: 1080 RPP8 n° of teeth 135	belt: 1120 RPP8 n° of teeth 140	belt: 1200 RPP8 n° of teeth 150	belt: 1224 RPP8 n° of teeth 153	belt: 1280 RPP8 n° of teeth 160	belt: 1352 RPP8 n° of teeth 169	belt: 1440 RPP8 n° of teeth 180	belt: 1464 RPP8 n° of teeth 183	belt: 1600 RPP8 n° of teeth 200
1,00	80	203,72	80	203,72				220,000	240,000	280,000	292,000	320,000	356,000	400,000	412,000	480,000
	72	183,35	72	183,35		212,000	232,000	252,000	272,000	312,000	324,000	352,000	388,000	432,000	444,000	512,000
	64	162,97	64	162,97	244,000	264,000	284,000	304,000	344,000	356,000	384,000		420,000	464,000	476,000	544,000
	56	142,60	56	142,60	256,000	276,000	296,000	316,000	336,000	376,000	388,000	416,000	452,000	496,000	508,000	576,000
	48	122,23	48	122,23	288,000	308,000	328,000	348,000	368,000	408,000	420,000	448,000	484,000	528,000	540,000	608,000
	44	112,05	44	284,000	304,000	324,000	344,000	364,000	384,000	424,000	436,000	464,000	500,000	544,000	556,000	624,000
	40	101,86	40	300,000	320,000	340,000	360,000	380,000	400,000	440,000	452,000	480,000	516,000	560,000	572,000	640,000
	38	96,77	38	96,77	328,000	348,000	368,000	388,000	408,000	448,000	460,000	488,000	524,000	568,000	580,000	648,000
	36	91,67	36	91,67	336,000	356,000	376,000	396,000	416,000	456,000	468,000	496,000	532,000	576,000	588,000	656,000
	34	86,58	34	86,58	344,000	364,000	384,000	404,000	424,000	464,000	476,000	504,000	540,000	584,000	596,000	664,000
	32	81,49	32	81,49	352,000	372,000	392,000	412,000	432,000	472,000	484,000	512,000	548,000	592,000	604,000	672,000
	30	76,39	30	76,39	360,000	380,000	400,000	420,000	440,000	480,000	492,000	520,000	556,000	600,000	612,000	680,000
	28	71,30	28	71,30	368,000	388,000	408,000	428,000	448,000	488,000	500,000	528,000	564,000	608,000	620,000	688,000
	26	66,21	26	66,21	376,000	396,000	416,000	436,000	456,000	496,000	508,000	536,000	572,000	616,000	628,000	696,000
	24	61,12	24	61,12	384,000	404,000	424,000	444,000	464,000	504,000	516,000	544,000	580,000	624,000	636,000	704,000
	22	56,02	22	56,02	392,000	412,000	432,000	452,000	472,000	512,000	524,000	552,000	588,000	632,000	644,000	712,000
1,05	38	96,77	40	101,86	323,990	343,991	363,991	383,992	403,992	443,993	455,993	483,993	519,994	563,994	575,994	643,995
1,06	36	91,67	38	96,77	331,990	351,991	371,991	391,992	411,992	451,993	463,993	491,993	527,994	571,994	583,994	651,995
	34	86,58	36	91,67	339,990	359,991	379,991	399,992	419,992	459,993	471,993	499,994	535,994	579,994	591,995	659,995
	32	81,49	34	86,58	347,991	367,991	387,992	407,992	427,992	467,993	479,993	507,994	543,994	587,994	599,995	667,995
1,07	30	76,39	32	81,49	355,991	375,991	395,992	415,992	435,993	475,993	487,993	515,994	551,994	595,995	607,995	675,995
1,07	28	71,30	30	76,39	363,991	383,992	403,992	423,992	443,993	483,993	495,993	523,994	559,994	603,995	615,995	683,995
1,08	26	66,21	28	71,30	371,991	391,992	411,992	431,992	451,993	491,993	503,994	531,994	567,994	611,995	623,995	691,995
	24	61,12	26	66,21	379,991	399,992	419,992	439,993	459,993	499,994	511,994	539,994	575,994	619,995	631,995	699,995
1,09	44	112,05	48	122,23	295,956	315,959	335,961	355,964	375,966	415,969	427,970	455,972	491,974	535,976	547,976	615,979
	22	56,02	24	61,12	387,992	407,992	427,992	447,993	467,993	507,994	519,994	547,994	583,994	627,995	639,995	707,995
1,10	40	101,86	44	112,05	311,958	331,961	351,963	371,965	391,967	431,970	443,971	471,973	507,974	551,977	563,977	631,979
1,11	72	183,35	80	203,72		195,735	215,760	235,780	255,797	295,825	307,831	335,846	371,860	415,875	427,879	495,895
	36	66,21	40	101,86	327,960	347,963	367,965	387,967	407,968	447,971	459,972	487,973	523,975	567,977	579,978	647,980
1,12	34	86,58	38	96,77	335,961	355,964	375,966	395,967	415,969	455,972	467,972	495,974	531,976	575,977	587,978	655,980
1,13	80	203,72	90	229,18					219,631	259,688	271,702	299,730	335,759	379,787	391,793	459,824
	64	162,97	72	183,35	207,750	227,772	247,791	267,806	287,820	327,842	339,847	367,859	403,872	447,884	459,887	527,902
	32	81,49	36	91,67	343,962	363,964	383,966	403,968	423,969	463,972	475,973	503,974	539,976	583,978	595,978	663,980
	30	76,39	34	86,58	351,963	371,965	391,967	411,969	431,970	471,973	483,973	511,975	547,976	591,978	603,979	671,981
1,14	56	142,60	64	162,97	239,784	259,800	279,815	299,827	319,838	359,856	371,860	399,870	435,881	479,892	491,895	559,907
	28	71,30	32	81,49	359,964	379,966	399,968	419,969	439,971	479,973	491,974	519,975	555,977	599,978	611,979	679,981
1,15	26	66,21	30	76,39	367,965	387,967	407,968	427,970	447,971	487,973	499,974	527,975	563,977	607,979	619,979	687,981
1,16	38	96,77	44	112,05	315,908	335,913	355,918	375,922	395,926	435,933	447,935	475,939	511,943	555,948	567,949	635,954
1,17	48	122,23	56	142,60	271,809	291,822	311,834	331,844	351,853	391,868	403,872	431,880	467,889	511,899	523,901	591,912
	24	61,12	28	71,30	375,966	395,967	415,969	435,970	455,972	495,974	507,974	535,976	571,977	615,979	627,979	695,981
1,18	34	86,58	40	101,86	331,912	351,917	371,922	391,926	411,929	451,935	463,937	491,941	527,945	571,949	583,950	651,955
	22	56,02	26	66,21	383,966	403,968	423,969	443,971	463,972	503,974	515,975	543,976	579,978	623,979	635,980	703,982
1,19	32	81,49	38	96,77	339,914	359,919	379,923	399,927	419,931	459,937	471,938	499,942	535,946	579,950	591,951	659,956
1,20	40	101,86	48	122,23	303,829	323,840	343,849	363,857	383,865	423,878	435,881	463,888	499,896	543,905	555,907	623,917
	30	76,39	36	91,67	347,916	367,921	387,925	407,928	427,932	467,938	479,939	507,943	543,946	587,950	599,951	667,956
1,21	28	71,30	34	86,58	355,918	375,922	395,926	415,930	435,933	475,939	487,940	515,943	551,947	595,951	607,952	675,957
1,22	36	91,67	44	112,05	319,838	339,847	359,856	379,863	399,870	439,882	451,885	479,892	515,899	559,907	571,909	639,919
1,23	26	66,21	32	81,49	363,920	383,924	403,928	423,931	443,934	483,940	495,941	523,944	559,948	603,952	615,953	683,957
1,25	72	183,35	90	229,18				214,776	234,881	275,045	287,085	315,166	351,252	395,336	407,355	475,448
	64	162,97	80	203,72	190,912	211,016	231,102	251,173	271,235	311,333	323,358	351,409	387,464	431,519	443,532	511,594
	32	81,49	40	101,86	335,846	355,854	375,862	395,869	415,875	455,886	467,889	495,895	531,902	575,910	587,912	655,921
	24	61,12	30	76,39	371,922	391,926	411,929	431,932	451,935	491,941	503,942	531,945	567,949	611,952	623,953	691,958
1,26	38	96,77	48	122,23	307,737	327,753	347,767	367,780	387,791	427,811	439,816	467,827	503,839	547,852	559,855	627,871
1,27	44	112,05	56	142,60	279,582	299,610	319,635	339,656	359,675	399,708	411,716	439,735	475,755	519,775	531,780	599,805
	30	76,39	38	96,77	343,849	363,857	383,865	403,872	423,878	463,888	475,891	503,897	539,904	583,911	595,913	663,922
	22	56,02	28	71,30	379,923	399,927	419,931	439,934	459,937	499,942	511,943	539,946	575,949	619,953	631,954	699,958
1,29	56	142,60	72	183,35	223,069	243,146	263,211	283,267	303,316	343,396	355,416	383,459	419,505	463,552	475,564	543,618
	34	86,58	44	112,05	323,750	343,764	363,777	383,789	403,799	443,817	455,822	483,832	519,844	563,856	575,859	643,874
	28	71,30	36	91,67	351,853	371,860	391,868	411,874	431,880	471,890	483,893	511,899	547,905	591,912	603,914	671,923
1,31	26	66,21	34	86,58	359,856	379,863	399,870	419,876	439,882	479,892	491,895	519,900	555,907	599,914	611,915	679,924
1,33	48	122,23	64	162,97	255,186	275,246	295,297	315,342	335,381	375,447	387,464	415,500	451,540	495,581	507,591	575,639
	36	91,67	48	122,23	311,625	331,648	351,668	371,686	391,702	431,730	443,737	471,753	507,770	551,788	563,793	631,815
	30	76,39	40	101,86	339,761	359,775	379,787	399,797	419,807	459,824	471,828	499,838	535,849	579,860	591,863	659,877
	24	61,12	32	81,49	367,859	387,866	407,873	427,879	447,884	487,894	499,896	527,902	563,908	607,915	619,916	687,925
1,36	28	71,30	38	96,77	347,767	367,780	387,791	407,801	427,811	467,827	479,831	507,840	543,851	587,862	599,865	667,879
	22	56,02	30	76,39	375,862	395,869	415,875	435,881	455,886	495,895	507,898	535,903	571,909	615,916	627,917	695,925

Table 3

Design centre distance (mm)												PULLEYS				
belt: 1760 RPP8 n° of teeth 220	belt: 1800 RPP8 n° of teeth 225	belt: 2000 RPP8 n° of teeth 250	belt: 2200 RPP8 n° of teeth 275	belt: 2400 RPP8 n° of teeth 300	belt: 2520 RPP8 n° of teeth 315	belt: 2600 RPP8 n° of teeth 325	belt: 2800 RPP8 n° of teeth 350	belt: 3048 RPP8 n° of teeth 381	belt: 3280 RPP8 n° of teeth 410	belt: 3600 RPP8 n° of teeth 450	belt: 4400 RPP8 n° of teeth 550	d2	z2	d1	z1	R
560,000	580,000	680,000	780,000	880,000	940,000	980,000	1080,000	1204,000	1320,000	1480,000	1880,000	203,72	80	203,72	80	1,00
592,000	612,000	712,000	812,000	912,000	972,000	1012,000	1112,000	1236,000	1352,000	1512,000	1912,000	183,35	72	183,35	72	
624,000	644,000	744,000	844,000	944,000	1004,000	1044,000	1144,000	1268,000	1384,000	1544,000	1944,000	162,97	64	162,97	64	
656,000	676,000	776,000	876,000	976,000	1036,000	1076,000	1176,000	1300,000	1416,000	1576,000	1976,000	142,60	56	142,60	56	
688,000	708,000	808,000	908,000	1008,000	1068,000	1108,000	1208,000	1332,000	1448,000	1608,000	2008,000	122,23	48	122,23	48	
704,000	724,000	824,000	924,000	1024,000	1084,000	1124,000	1224,000	1348,000	1464,000	1624,000	2024,000	112,05	44	112,05	44	
720,000	740,000	840,000	940,000	1040,000	1100,000	1140,000	1240,000	1364,000	1480,000	1640,000	2040,000	101,86	40	101,86	40	
728,000	748,000	848,000	948,000	1048,000	1108,000	1148,000	1248,000	1372,000	1488,000	1648,000	2048,000	96,77	38	96,77	38	
736,000	756,000	856,000	956,000	1056,000	1116,000	1156,000	1256,000	1380,000	1496,000	1656,000	2056,000	91,67	36	91,67	36	
744,000	764,000	864,000	964,000	1064,000	1124,000	1164,000	1264,000	1388,000	1504,000	1664,000	2064,000	86,58	34	86,58	34	
752,000	772,000	872,000	972,000	1072,000	1132,000	1172,000	1272,000	1396,000	1512,000	1672,000	2072,000	81,49	32	81,49	32	
760,000	780,000	880,000	980,000	1080,000	1140,000	1180,000	1280,000	1404,000	1520,000	1680,000	2080,000	76,39	30	76,39	30	
768,000	788,000	888,000	988,000	1088,000	1148,000	1188,000	1288,000	1412,000	1528,000	1688,000	2088,000	71,30	28	71,30	28	
776,000	796,000	896,000	996,000	1096,000	1156,000	1196,000	1296,000	1420,000	1536,000	1696,000	2096,000	66,21	26	66,21	26	
784,000	804,000	904,000	1004,000	1104,000	1164,000	1204,000	1304,000	1428,000	1544,000	1704,000	2104,000	61,12	24	61,12	24	
792,000	812,000	912,000	1012,000	1112,000	1172,000	1212,000	1312,000	1436,000	1552,000	1712,000	2112,000	56,02	22	56,02	22	
723,996	743,996	843,996	943,997	1043,997	1103,997	1143,997	1243,997	1367,998	1483,998	1643,998	2043,998	101,86	40	96,77	38	1,05
731,996	751,996	851,996	951,997	1051,997	1111,997	1151,997	1251,997	1375,998	1491,998	1651,998	2051,998	96,77	38	91,67	36	1,06
739,996	759,996	859,996	959,997	1059,997	1119,997	1159,997	1259,997	1383,998	1499,998	1659,998	2059,998	91,67	36	86,58	34	
747,996	767,996	867,996	967,997	1067,997	1127,997	1167,997	1267,997	1391,998	1507,998	1667,998	2067,998	86,58	34	81,49	32	
755,996	775,996	875,996	975,997	1075,997	1135,997	1175,997	1275,997	1399,998	1515,998	1675,998	2075,998	81,49	32	76,39	30	1,07
763,996	783,996	883,996	983,997	1083,997	1143,997	1183,997	1283,997	1407,998	1523,998	1683,998	2083,998	76,39	30	71,30	28	1,07
771,996	791,996	891,996	991,997	1091,997	1151,997	1191,997	1291,997	1415,998	1531,998	1691,998	2091,998	71,30	28	66,21	26	1,08
779,996	799,996	899,996	999,997	1099,997	1159,997	1199,997	1299,998	1423,998	1539,998	1699,998	2099,998	66,21	26	61,12	24	
695,981	715,982	815,984	915,986	1015,987	1075,988	1115,988	1215,989	1339,990	1455,991	1615,992	2015,994	122,23	48	112,05	44	1,09
787,996	807,996	907,996	1007,997	1107,997	1167,997	1207,997	1307,998	1431,998	1547,998	1707,998	2107,998	61,12	24	56,02	22	
711,982	731,982	831,984	931,986	1031,987	1091,988	1131,989	1231,989	1355,990	1471,991	1631,992	2031,994	112,05	44	101,86	40	1,10
575,910	595,913	695,925	795,935	895,942	955,946	995,948	1095,953	1219,957	1335,961	1495,965	1895,973	203,72	80	183,35	72	1,11
727,982	747,983	847,985	947,986	1047,988	1107,988	1147,989	1247,990	1371,991	1487,991	1647,992	2047,994	101,86	40	66,21	36	
735,982	755,983	855,985	955,986	1055,988	1115,988	1155,989	1255,990	1379,991	1495,991	1655,992	2055,994	96,77	38	86,58	34	1,12
539,850	559,855	659,877	759,893	859,906	919,912	959,916	1059,924	1183,932	1299,938	1459,944	1859,956	229,18	90	203,72	80	1,13
607,915	627,917	727,929	827,937	927,944	987,947	1027,950	1127,954	1251,959	1367,962	1527,966	1927,973	183,35	72	162,97	64	
743,983	763,983	863,985	963,987	1063,988	1123,988	1163,989	1263,990	1387,991	1503,991	1663,992	2063,994	91,67	36	81,49	32	
751,983	771,983	871,985	971,987	1071,988	1131,989	1171,989	1271,990	1395,991	1511,991	1671,992	2071,994	86,58	34	76,39	30	
639,919	659,921	759,932	859,940	959,946	1019,949	1059,951	1159,955	1283,960	1399,963	1559,967	1959,974	162,97	64	142,60	56	1,14
759,983	779,983	879,985	979,987	1079,988	1139,989	1179,989	1279,990	1403,991	1519,991	1679,992	2079,994	81,49	32	71,30	28	
767,983	787,984	887,985	987,987	1087,988	1147,989	1187,989	1287,990	1411,991	1527,992	1687,992	2087,994	76,39	30	66,21	26	1,15
715,959	735,960	835,965	935,969	1035,972	1095,973	1135,974	1235,976	1359,979	1475,980	1635,982	2035,986	112,05	44	96,77	38	1,16
671,923	691,925	791,934	891,942	991,948	1051,951	1091,952	1191,956	1315,961	1431,964	1591,967	1991,974	142,60	56	122,23	48	1,17
775,983	795,984	895,986	995,987	1095,988	1155,989	1195,989	1295,990	1419,991	1535,992	1695,992	2095,994	71,30	28	61,12	24	
731,960	751,961	851,966	951,969	1051,972	1111,974	1151,975	1251,977	1375,979	1491,980	1651,982	2051,986	101,86	40	86,58	34	1,18
783,983	803,984	903,986	1003,987	1103,988	1163,989	1203,989	1303,990	1427,991	1543,992	1703,992	2103,994	66,21	26	56,02	22	
739,961	759,962	859,966	959,970	1059,972	1119,974	1159,975	1259,977	1383,979	1499,981	1659,982	2059,986	96,77	38	81,49	32	1,19
703,926	723,928	823,937	923,944	1023,949	1083,952	1123,954	1223,958	1347,962	1463,965	1623,968	2023,974	122,23	48	101,86	40	1,20
747,961	767,962	867,966	967,970	1067,973	1127,974	1167,975	1267,977	1391,979	1507,981	1667,983	2067,986	91,67	36	76,39	30	
755,961	775,962	875,967	975,970	1075,973	1135,974	1175,975	1275,977	1399,979	1515,981	1675,983	2075,986	86,58	34	71,30	28	1,21
719,928	739,930	839,938	939,945	1039,950	1099,953	1139,954	1239,958	1363,962	1479,965	1639,968	2039,975	112,05	44	91,67	36	1,22
763,962	783,963	883,967	983,970	1083,973	1143,974	1183,975	1283,977	1407,979	1523,981	1683,983	2083,986	81,49	32	66,21	26	1,23
555,527	575,544	675,611	775,661	875,700	935,719	975,731	1075,756	1199,781	1315,800	1475,822	1875,860	229,18	90	183,35	72	1,25
591,649	611,661	711,708	811,744	911,772	971,786	1011,795	1111,813	1235,832	1351,846	1511,863	1911,891	203,72	80	162,97	64	
735,930	755,931	855,939	955,946	1055,951	1115,954	1155,955	1255,959	1379,962	1495,965	1655,969	2055,975	101,86	40	81,49	32	
771,962	791,963	891,967	991,971	1091,973	1151,975	1191,976	1291,977	1415,979	1531,981	1691,983	2091,986	76,39	30	61,12	24	
707,885	727,889	827,902	927,913	1027,921	1087,925	1127,928	1227,934	1351,940	1467,945	1627,950	2027,960	122,23	48	96,77	38	1,26
679,828	699,833	799,854	899,870	999,883	1059,890	1099,894	1199,903	1323,912	1439,919	1599,927	1999,942	142,60	56	112,05	44	1,27
743,930	763,932	863,940	963,946	1063,951	1123,954	1163,955	1263,959	1387,963	1503,966	1663,969	2063,975	96,77	38	76,39	30	
779,963	799,964	899,968	999,971	1099,973	1159,975	1199,976	1299,978	1423,980	1539,981	1699,983	2099,986	71,30	28	56,02	22	
623,667	643,678	743,721	843,754	943,780	1003,793	1043,801	1143,819	1267,836	1383,850	1543,866	1943,893	183,35	72	142,60	56	1,29
723,888	743,891	843,904	943,914	1043,922	1103,927	1143,929	1243,935	1367,941	1483,945	1643,951	2043,960	112,05	44	86,58	34	
751,931	771,933	871,941	971,947	1071,952	1131,954	1171,956	1271,959	1395,963	1511,966	1671,969	2071,975	91,67	36	71,30	28	
759,932	779,933	879,941	979,947	1079,952	1139,954	1179,956	1279,959	1403,963	1519,966	1679,969	2079,975	86,58	34	66,21	26	1,31
655,684	675,693	775,732	875,763	975,787	1035,800	1075,807	1175,824	1299,840	1415,853	1575,868	1975,895	162,97	64	122,23	48	1,33
711,836	731,841	831,860	931,875	1031,887	1091,893	1131,897	1231,905	1355,914	1471,921	1631,928	2031,943	122,23	48	91,67	36	
739,890	759,893	859,906	959,916	1059,924	1119,928	1159,930	1259,936	1383,941	1499,946	1659,951	2059,961	101,86	40	76,39	30	
767,932	787,934	887,942	987,947	1087,952	1147,955	1187,956	1287,960	1411,963	1527,966	1687,969	2087,975	81,49	32	61,12	24	
747,892	767,894	867,907	967,916	1067,924	1127,928	1167,931	1267,936	1391,942	1507,946	1667,951	2067,961	96,77	38	71,30	28	1,36
775,933	795,935	895,942	995,948	1095,953	1155,955	1195,957	1295,960	1419,963	1535,966	1695,969	2095,975	76,39	30	56,02	22	

Table 3

	PULLEYS				Design centre distance (mm)										
R	z1	d1	z2	d2	belt: 288 RPP8 n° of teeth 36	belt: 320 RPP8 n° of teeth 40	belt: 352 RPP8 n° of teeth 44	belt: 360 RPP8 n° of teeth 45	belt: 384 RPP8 n° of teeth 48	belt: 408 RPP8 n° of teeth 51	belt: 456 RPP8 n° of teeth 57	belt: 480 RPP8 n° of teeth 60	belt: 536 RPP8 n° of teeth 67	belt: 544 RPP8 n° of teeth 68	belt: 560 RPP8 n° of teeth 70
1,38	32	81,49	44	112,05									114,983	119,018	127,080
	26	66,21	36	91,67						78,971	103,214	115,296	143,435	147,450	155,478
1,40	80	203,72	112	285,21											
	40	101,86	56	142,60											
1,41	64	162,97	90	229,18											
	34	86,58	48	122,23										106,505	114,611
1,42	24	61,12	34	86,58					74,915	87,067	111,271	123,342	151,465	155,478	163,504
1,43	56	142,60	80	203,72											
	28	71,30	40	101,86							90,710	102,863	131,109	135,135	143,184
1,45	44	112,05	64	162,97											
	22	56,02	32	81,49				70,853	83,022	95,147	119,320	131,383	159,492	163,504	171,527
1,46	26	66,21	38	96,77							98,816	110,946	139,160	143,184	151,228
1,47	38	96,77	56	142,60											
	30	76,39	44	112,05									118,659	122,703	130,783
1,50	48	122,23	72	183,35											
	32	81,49	48	122,23									106,037	110,110	118,241
	24	61,12	36	91,67						82,583	106,906	119,018	147,206	151,228	159,267
1,54	26	66,21	40	101,86							94,310	106,505	134,820	138,854	146,917
1,55	22	56,02	34	86,58					78,509	90,710	114,983	127,080	155,248	159,267	167,302
1,56	72	183,35	112	285,21											
	36	91,67	56	142,60											
1,57	28	71,30	44	112,05								93,778	122,299	126,354	134,454
1,58	24	61,12	38	96,77							102,445	114,611	142,887	146,917	154,974
1,60	40	101,86	64	162,97											
	30	76,39	48	122,23									109,595	113,682	121,838
1,61	56	142,60	90	229,18											
1,64	44	112,05	72	183,35											
	22	56,02	36	91,67					73,838	86,149	110,560	122,703	150,946	154,974	163,024
1,65	34	86,58	56	142,60											
1,67	48	122,23	80	203,72											
	24	61,12	40	101,86							97,872	110,110	138,499	142,542	150,620
1,68	38	96,77	64	162,97											
1,69	26	66,21	44	112,05								97,288	125,908	129,974	138,094
1,71	28	71,30	48	122,23									113,122	117,223	125,406
1,73	22	56,02	38	96,77						81,438	106,037	118,241	146,582	150,620	158,691
1,75	64	162,97	112	285,21											
	32	81,49	56	142,60											
1,78	36	91,67	64	162,97											
1,80	80	203,72	144	366,69											
	40	101,86	72	183,35											
1,82	44	112,05	80	203,72											
	22	56,02	40	101,86							101,399	113,682	142,148	146,200	154,295
1,83	24	61,12	44	112,05							88,302	100,765	129,488	133,565	141,706
1,85	26	66,21	48	122,23									116,619	120,736	128,945
1,87	30	76,39	56	142,60											
1,88	48	122,23	90	229,18											
	34	86,58	64	162,97											
1,89	38	96,77	72	183,35											
2,00	72	183,35	144	366,69											
	56	142,60	112	285,21											
	40	101,86	80	203,72											
	36	91,67	72	183,35											
	32	81,49	64	162,97											
	28	71,30	56	142,60											
	24	61,12	48	122,23									120,091	124,222	132,459
	22	56,02	44	112,05							91,687	104,212	133,040	137,129	145,291
2,05	44	112,05	90	229,18											
2,11	38	96,77	80	203,72											
2,12	34	86,58	72	183,35											
2,13	30	76,39	64	162,97											
2,15	26	66,21	56	142,60										109,252	
2,18	22	56,02	48	122,23							94,116	123,537	127,684	135,949	
2,22	36	91,67	80	203,72											
2,25	64	162,97	144	366,69											
	40	101,86	90	229,18											
	32	81,49	72	183,35											

Table 3

Design centre distance (mm)											PULLEYS				
belt: 600 RPP8 n° of teeth 75	belt: 608 RPP8 n° of teeth 76	belt: 632 RPP8 n° of teeth 79	belt: 640 RPP8 n° of teeth 80	belt: 680 RPP8 n° of teeth 85	belt: 720 RPP8 n° of teeth 90	belt: 800 RPP8 n° of teeth 100	belt: 840 RPP8 n° of teeth 105	belt: 880 RPP8 n° of teeth 110	belt: 896 RPP8 n° of teeth 112	belt: 920 RPP8 n° of teeth 115	d2	z2	d1	z1	R
147,206	151,228	163,285	167,302	187,377	207,437	247,528	267,564	287,594	295,605	307,620	112,05	44	81,49	32	1,38
175,538	179,548	191,577	195,585	215,624	235,656	275,706	295,726	315,743	323,750	335,759	91,67	36	66,21	26	
											285,21	112	203,72	80	1,40
		122,299	126,354	146,582	166,754	206,997	227,086	247,160	255,186	267,223	142,6	56	101,86	40	
											229,18	90	162,97	64	1,41
134,820	138,854	150,946	154,974	175,092	195,185	235,325	255,378	275,423	283,439	295,462	122,23	48	86,58	34	
183,558	187,568	199,594	203,602	223,637	243,667	283,714	303,733	323,750	331,756	343,764	86,58	34	61,12	24	1,42
									173,299	185,477	203,72	80	142,60	56	1,43
163,285	167,302	179,349	183,363	203,426	223,477	263,557	283,588	303,615	311,625	323,639	101,86	40	71,30	28	
					141,706	182,218	202,396	222,541	230,593	242,663	162,97	64	112,05	44	1,45
191,577	195,585	207,609	211,617	231,650	251,678	291,722	311,740	331,756	339,761	351,770	81,49	32	56,02	22	
171,318	175,334	187,377	191,390	211,448	231,496	271,570	291,600	311,625	319,635	331,648	96,77	38	66,21	26	1,46
		125,908	129,974	150,249	170,457	210,753	230,861	250,953	258,985	271,030	142,6	56	96,77	38	1,47
150,946	154,974	167,048	171,070	191,168	211,247	251,368	271,414	291,455	299,469	311,490	112,05	44	76,39	30	
						157,017	177,361	197,633	205,726	217,853	183,35	72	122,23	48	1,50
138,499	142,542	154,656	158,691	178,838	198,956	239,132	259,199	279,257	287,277	299,306	122,23	48	81,49	32	
179,349	183,363	195,402	199,414	219,468	239,513	279,582	299,610	319,635	327,644	339,656	91,67	36	61,12	24	
167,048	171,070	183,132	187,150	207,233	227,301	267,406	287,447	307,483	315,496	327,515	101,86	40	66,21	26	1,54
187,377	191,390	203,426	207,437	227,487	247,528	287,594	307,620	327,644	335,652	347,664	86,58	34	56,02	22	1,55
											285,21	112	183,35	72	1,56
	117,223	129,488	133,565	153,888	174,135	214,487	234,617	254,726	262,765	274,819	142,6	56	91,67	36	
154,656	158,691	170,784	174,812	194,935	215,034	255,186	275,246	295,297	303,316	315,342	112,05	44	71,30	28	1,57
175,092	179,112	191,168	195,185	215,262	235,325	275,423	295,462	315,496	323,509	335,526	96,77	38	61,12	24	1,58
					148,852	189,531	209,770	229,967	238,036	250,131	162,97	64	101,86	40	1,60
142,148	146,200	158,338	162,380	182,560	202,703	242,918	263,001	283,072	291,097	303,133	122,23	48	76,39	30	
											229,18	90	142,60	56	1,61
						164,112	184,546	204,891	213,010	225,172	183,35	72	112,05	44	1,64
183,132	187,150	199,202	203,218	223,288	243,347	283,439	303,476	323,509	331,521	343,537	91,67	36	56,02	22	
116,619	120,736	133,040	137,129	157,503	177,789	218,200	238,352	258,481	266,527	278,591	142,6	56	86,58	34	1,65
								179,352	187,557	199,832	203,72	80	122,23	48	1,67
170,784	174,812	186,889	190,912	211,016	231,102	271,235	291,287	311,333	319,350	331,374	101,86	40	61,12	24	
				131,821	152,390	193,156	213,427	233,651	241,730	253,838	162,97	64	96,77	38	1,68
158,338	162,380	174,493	178,527	198,677	218,799	258,985	279,058	299,122	307,145	319,177	112,05	44	66,21	26	1,69
145,770	149,831	161,994	166,043	186,257	206,427	246,684	266,784	286,869	294,900	306,943	122,23	48	71,30	28	1,71
178,838	182,864	194,935	198,956	219,052	239,132	279,257	299,306	319,350	327,366	339,388	96,77	38	56,02	22	1,73
											285,21	112	162,97	64	1,75
120,091	124,222	136,567	140,668	161,093	181,420	221,893	242,069	262,217	270,271	282,345	142,6	56	81,49	32	
				135,274	155,906	196,761	217,066	237,317	245,406	257,528	162,97	64	91,67	36	1,78
											366,69	144	203,72	80	1,80
						171,126	191,653	212,074	220,220	232,420	183,35	72	101,86	40	
							165,616	186,333	194,576	206,902	203,72	80	112,05	44	1,82
174,493	178,527	190,621	194,649	214,776	234,881	275,045	295,110	315,166	323,187	335,216	101,86	40	56,02	22	
161,994	166,043	178,177	182,218	202,396	222,541	262,765	282,853	302,929	310,957	322,996	112,05	44	61,12	24	1,83
149,366	153,436	165,626	169,683	189,931	210,130	250,432	270,549	290,649	298,686	310,737	122,23	48	66,21	26	1,85
123,537	127,684	140,070	144,183	164,661	185,031	225,566	245,767	265,937	273,998	286,083	142,6	56	76,39	30	1,87
										175,802	229,18	90	122,23	48	1,88
				138,707	159,401	200,348	220,686	240,966	249,065	261,202	162,97	64	86,58	34	
						174,606	195,179	215,640	223,800	236,019	183,35	72	96,77	38	1,89
											366,69	144	183,35	72	2,00
											285,21	112	142,60	56	
							172,422	193,249	201,530	213,908	203,72	80	101,86	40	
						178,067	198,689	219,190	227,364	239,602	183,35	72	91,67	36	
				142,119	162,877	203,916	224,289	244,599	252,708	264,860	162,97	64	81,49	32	
126,961	131,123	143,550	147,675	168,208	188,621	229,222	249,448	269,640	277,709	289,804	142,6	56	71,30	28	
152,937	157,017	169,234	173,299	193,583	213,813	254,161	274,296	294,413	302,455	314,514	122,23	48	61,12	24	
165,626	169,683	181,838	185,885	206,093	226,264	266,527	286,630	306,720	314,753	326,799	112,05	44	56,02	22	
										182,520	229,18	90	112,05	44	2,05
						154,659	175,802	196,684	204,984	217,389	203,72	80	96,77	38	2,11
					139,524	181,513	202,183	222,724	230,912	243,171	183,35	72	86,58	34	2,12
		120,111	124,388	145,512	166,334	207,467	227,876	248,215	256,336	268,503	162,97	64	76,39	30	2,13
130,363	134,540	147,009	151,147	171,734	192,192	232,860	253,112	273,327	281,404	293,511	142,6	56	66,21	26	2,15
156,485	160,575	172,820	176,893	197,215	217,476	257,872	278,027	298,160	306,209	318,277	122,23	48	56,02	22	2,18
						157,957	179,168	200,105	208,424	220,856	203,72	80	91,67	36	2,22
											366,69	144	162,97	64	2,25
								167,770	176,381	189,184	229,18	90	101,86	40	
					142,819	184,942	205,661	226,243	234,446	246,725	183,35	72	81,49	32	

Table 3

	PULLEYS				Design centre distance (mm)											
R	z1	d1	z2	d2	belt: 960 RPP8 n° of teeth 120	belt: 1000 RPP8 n° of teeth 125	belt: 1040 RPP8 n° of teeth 130	belt: 1080 RPP8 n° of teeth 135	belt: 1120 RPP8 n° of teeth 140	belt: 1200 RPP8 n° of teeth 150	belt: 1224 RPP8 n° of teeth 153	belt: 1280 RPP8 n° of teeth 160	belt: 1352 RPP8 n° of teeth 169	belt: 1440 RPP8 n° of teeth 180	belt: 1464 RPP8 n° of teeth 183	belt: 1600 RPP8 n° of teeth 200
1,38	32	81,49	44	112,05	327,644	347,664	367,683	387,699	407,714	447,739	459,746	487,761	523,777	567,794	579,799	647,820
	26	66,21	36	91,67	355,772	375,784	395,795	415,805	435,814	475,830	487,834	515,843	551,853	595,864	607,867	675,880
1,40	80	203,72	112	285,21								252,708	289,124	333,508	345,595	413,993
	40	101,86	56	142,60	287,277	307,325	327,366	347,403	367,435	407,491	419,505	447,536	483,571	527,607	539,615	607,658
1,41	64	162,97	90	229,18			209,377	229,609	249,803	290,109	302,185	330,340	366,504	410,665	422,703	490,883
	34	86,58	48	122,23	315,496	335,526	355,553	375,577	395,598	435,635	447,645	475,666	511,689	555,714	567,720	635,750
1,42	24	61,12	34	86,58	363,777	383,789	403,799	423,809	443,817	483,832	495,837	523,845	559,855	603,866	615,868	683,881
1,43	56	142,60	80	203,72	205,726	225,930	246,100	266,244	286,368	326,569	338,620	366,726	402,840	446,955	458,982	527,114
	28	71,30	40	101,86	343,660	363,679	383,696	403,711	423,725	463,748	475,755	503,768	539,784	583,800	595,804	663,824
1,45	44	112,05	64	162,97	262,765	282,853	302,929	322,996	343,054	383,153	395,179	423,234	459,294	503,356	515,371	583,444
	22	56,02	32	81,49	371,782	391,793	411,803	431,812	451,821	491,835	503,839	531,848	567,857	611,868	623,870	691,883
1,46	26	66,21	38	96,77	351,668	371,686	391,702	411,716	431,730	471,753	483,759	511,772	547,787	591,803	603,807	671,826
1,47	38	96,77	56	142,60	291,097	311,156	331,207	351,252	371,292	411,361	423,380	451,418	487,461	531,506	543,517	611,571
	30	76,39	44	112,05	331,521	351,548	371,572	391,594	411,614	451,648	463,657	491,677	527,699	571,722	583,728	651,756
1,50	48	122,23	72	183,35	238,036	258,190	278,321	298,434	318,533	358,698	370,740	398,829	434,926	479,025	491,049	559,165
	32	81,49	48	122,23	319,350	339,388	359,423	379,453	399,480	439,528	451,540	479,567	515,597	559,629	571,637	639,676
	24	61,12	36	91,67	359,675	379,693	399,708	419,722	439,735	479,757	491,763	519,775	555,790	599,805	611,809	679,828
1,54	26	66,21	40	101,86	347,543	367,568	387,590	407,610	427,628	467,660	479,669	507,687	543,708	587,730	599,735	667,762
1,55	22	56,02	34	86,58	367,683	387,699	407,714	427,727	447,739	487,761	499,766	527,779	563,793	607,808	619,812	687,830
1,56	72	183,35	112	285,21							238,542	267,130	303,720	348,269	360,395	428,973
	36	91,67	56	142,60	294,900	314,970	335,032	355,087	375,135	415,219	427,241	455,288	491,340	535,394	547,408	615,473
1,57	28	71,30	44	112,05	335,381	355,416	375,447	395,475	415,500	455,544	467,556	495,581	531,610	575,639	587,647	655,684
1,58	24	61,12	38	96,77	355,553	375,577	395,598	415,618	435,635	475,666	487,674	515,692	551,712	595,733	607,739	675,765
1,60	40	101,86	64	162,97	270,271	290,391	310,495	330,587	350,668	390,805	402,840	430,916	467,000	511,086	523,107	591,210
	30	76,39	48	122,23	323,187	343,235	363,277	383,315	403,349	443,408	455,423	483,457	519,494	563,534	575,544	643,592
1,61	56	142,60	90	229,18		203,375	223,800	244,152	264,449	304,922	317,040	345,283	381,541	425,797	437,858	506,148
1,64	44	112,05	72	183,35	245,406	265,604	285,773	305,920	326,049	366,264	378,319	406,435	442,563	486,694	498,725	566,879
	22	56,02	36	91,67	363,563	383,586	403,606	423,625	443,642	483,671	495,679	523,697	559,716	603,737	615,742	683,768
1,65	34	86,58	56	142,60	298,686	318,768	338,842	358,906	378,964	419,063	431,090	459,145	495,208	539,272	551,288	619,366
1,67	48	122,23	80	203,72	220,220	240,541	260,811	281,041	301,240	341,567	353,650	381,824	418,013	462,203	474,249	542,469
	24	61,12	40	101,86	351,409	371,441	391,470	411,496	431,519	471,560	483,571	511,594	547,621	591,649	603,656	671,691
1,68	38	96,77	64	162,97	273,998	294,135	314,255	334,360	354,453	394,611	406,652	434,739	470,836	514,936	526,960	595,079
1,69	26	66,21	44	112,05	339,226	359,269	379,307	399,342	419,374	459,428	471,443	499,474	535,510	579,547	591,556	659,602
1,71	28	71,30	48	122,23	327,008	347,065	367,116	387,162	407,204	447,275	459,294	487,335	523,380	567,429	579,440	647,499
1,73	22	56,02	38	96,77	359,423	379,453	399,480	419,505	439,528	479,567	491,578	519,601	555,626	599,654	611,661	679,695
1,75	64	162,97	112	285,21						240,182	252,569	281,335	318,111	362,841	375,009	443,785
	32	81,49	56	142,60	302,455	322,551	342,636	362,712	382,780	422,895	434,926	462,991	499,064	543,140	555,159	623,251
1,78	36	91,67	64	162,97	277,709	297,864	318,000	338,119	358,225	398,404	410,451	438,550	474,661	518,775	530,802	598,939
1,80	80	203,72	144	366,69												342,253
	40	101,86	72	183,35	252,708	272,953	293,164	313,347	333,508	373,777	385,847	413,993	450,155	494,320	506,360	574,555
1,82	44	112,05	80	203,72	227,364	247,748	268,072	288,349	308,590	348,986	361,087	389,298	425,529	469,762	481,818	550,089
	22	56,02	40	101,86	355,260	375,300	395,336	415,368	435,397	475,448	487,461	515,490	551,524	595,559	607,568	675,611
1,83	24	61,12	44	112,05	343,054	363,107	383,153	403,196	423,234	463,300	475,318	503,356	539,399	583,444	595,455	663,511
1,85	26	66,21	48	122,23	330,813	350,881	370,942	390,996	411,045	451,130	463,153	491,201	527,256	571,313	583,327	651,398
1,87	30	76,39	56	142,60	306,209	326,319	346,417	366,504	386,582	426,715	438,751	466,826	502,910	546,998	559,020	627,126
1,88	48	122,23	90	229,18	196,684	217,389	237,966	258,448	278,857	319,514	331,680	360,021	396,387	440,752	452,839	521,255
	34	86,58	64	162,97	281,404	301,578	321,730	341,864	361,983	402,185	414,238	442,350	478,475	522,603	534,635	602,789
1,89	38	96,77	72	183,35	256,336	276,605	296,838	317,040	337,217	377,515	389,592	417,755	453,934	498,118	510,162	578,379
2,00	72	183,35	144	366,69											285,132	356,135
	56	142,60	112	285,21						253,922	266,400	295,351	332,321	377,241	389,455	458,444
	40	101,86	80	203,72	234,446	254,895	275,275	295,602	315,885	356,354	368,475	396,726	433,001	477,280	489,347	557,673
	36	91,67	72	183,35	259,948	280,243	300,497	320,719	340,914	381,241	393,326	421,505	457,703	501,906	513,955	582,195
	32	81,49	64	162,97	285,084	305,277	325,446	345,595	365,728	405,954	418,013	446,138	482,278	526,422	538,458	606,631
	28	71,30	56	142,60	309,947	330,073	350,184	370,282	390,371	430,523	442,563	470,649	506,745	550,846	562,871	630,993
	24	61,12	48	122,23	334,604	354,683	374,753	394,817	414,874	454,973	467,000	495,057	531,121	575,188	587,205	655,287
	22	56,02	44	112,05	346,868	366,930	386,986	407,036	427,081	467,160	479,181	507,226	543,278	587,332	599,345	667,412
2,05	44	112,05	90	229,18	203,513	224,309	244,964	265,514	285,981	326,736	338,927	367,321	403,744	448,167	460,269	528,753
2,11	38	96,77	80	203,72	237,966	258,448	278,857	299,208	319,514	360,021	372,151	400,424	436,722	481,024	493,097	561,451
2,12	34	86,58	72	183,35	263,546	283,867	304,143	324,385	344,598	384,955	397,048	425,245	461,461	505,684	517,738	586,001
2,13	30	76,39	64	162,97	288,749	308,962	329,149	349,314	369,461	409,711	421,776	449,916	486,071	530,232	542,271	610,464
2,15	26	66,21	56	142,60	313,671	333,812	353,937	374,048	394,148	434,319	446,365	474,462	510,571	554,684	566,712	634,851
2,18	22	56,02	48	122,23	338,379	358,470	378,552	398,625	418,691	458,805	470,836	498,901	534,975	579,053	591,073	659,169
2,22	36	91,67	80	203,72	241,472	261,987	282,425	302,803	323,131	363,676	375,817	404,110	440,432	484,759	496,838	565,221
2,25	64	162,97	144	366,69										285,638	298,443	369,884
	40	101,86	90	229,18	210,288	231,178	251,912	272,530	293,058	333,913	346,129	374,577	411,060	455,544	467,660	536,216
	32	81,49	72	183,35	267,130	287,477	307,776	328,038	348,269	388,658	400,759	428,973	465,209	509,452	521,511	589,800

Table 3

Design centre distance (mm)												PULLEYS				
belt: 1760 RPP8 n° of teeth 220	belt: 1800 RPP8 n° of teeth 225	belt: 2000 RPP8 n° of teeth 250	belt: 2200 RPP8 n° of teeth 275	belt: 2400 RPP8 n° of teeth 300	belt: 2520 RPP8 n° of teeth 315	belt: 2600 RPP8 n° of teeth 325	belt: 2800 RPP8 n° of teeth 350	belt: 3048 RPP8 n° of teeth 381	belt: 3280 RPP8 n° of teeth 410	belt: 3600 RPP8 n° of teeth 450	belt: 4400 RPP8 n° of teeth 550	d2	z2	d1	z1	R
727,840	747,844	847,862	947,877	1047,889	1107,895	1147,898	1247,906	1371,915	1487,922	1647,929	2047,943	112,05	44	81,49	32	1,38
755,893	775,896	875,907	975,917	1075,925	1135,929	1175,931	1275,936	1399,942	1515,947	1675,952	2075,961	91,67	36	66,21	26	
494,320	514,386	614,649	714,839	814,981	875,051	915,093	1015,182	1139,271	1255,339	1415,414	1815,543	285,21	112	203,72	80	1,40
687,698	707,707	807,743	907,771	1007,794	1067,806	1107,813	1207,828	1331,844	1447,857	1607,871	2007,897	142,6	56	101,86	40	
571,040	591,073	691,207	791,307	891,385	951,424	991,447	1091,498	1215,549	1331,588	1491,633	1891,710	229,18	90	162,97	64	1,41
715,778	735,784	835,810	935,830	1035,847	1095,855	1135,860	1235,871	1359,883	1475,892	1635,903	2035,922	122,23	48	86,58	34	
763,894	783,897	883,908	983,918	1083,925	1143,929	1183,932	1283,937	1407,942	1523,947	1683,952	2083,961	86,58	34	61,12	24	1,42
607,231	627,256	727,358	827,436	927,497	987,527	1027,546	1127,586	1251,627	1367,659	1527,694	1927,758	203,72	80	142,60	56	1,43
743,843	763,847	863,865	963,879	1063,890	1123,896	1163,900	1263,908	1387,916	1503,922	1663,930	2063,943	101,86	40	71,30	28	
663,511	683,526	783,586	883,633	983,670	1043,689	1083,701	1183,726	1307,752	1423,772	1583,795	1983,837	162,97	64	112,05	44	1,45
771,895	791,898	891,909	991,918	1091,926	1151,930	1191,932	1291,937	1415,943	1531,947	1691,952	2091,961	81,49	32	56,02	22	
751,845	771,849	871,866	971,880	1071,891	1131,897	1171,900	1271,908	1395,916	1511,923	1671,930	2071,944	96,77	38	66,21	26	1,46
691,620	711,631	811,676	911,712	1011,740	1071,755	1111,764	1211,783	1335,803	1451,819	1611,837	2011,869	142,6	56	96,77	38	1,47
731,783	751,789	851,813	951,833	1051,849	1111,857	1151,862	1251,873	1375,885	1491,894	1651,904	2051,923	112,05	44	76,39	30	
639,270	659,292	759,385	859,457	959,513	1019,542	1059,559	1159,597	1283,636	1399,666	1559,701	1959,762	183,35	72	122,23	48	1,50
719,712	739,719	839,753	939,779	1039,800	1099,811	1139,818	1239,833	1363,848	1479,860	1639,873	2039,898	122,23	48	81,49	32	
759,846	779,850	879,867	979,881	1079,892	1139,898	1179,901	1279,909	1403,917	1519,923	1679,931	2079,944	91,67	36	61,12	24	
747,788	767,793	867,817	967,836	1067,851	1127,859	1167,864	1267,875	1391,886	1507,895	1667,905	2067,923	101,86	40	66,21	26	1,54
767,848	787,852	887,869	987,882	1087,893	1147,898	1187,902	1287,909	1411,917	1527,924	1687,931	2087,944	86,58	34	56,02	22	1,55
509,452	529,549	629,940	730,223	830,438	890,543	930,606	1030,742	1154,877	1270,979	1431,094	1831,292	285,21	112	183,35	72	1,56
695,534	715,547	815,602	915,646	1015,681	1075,699	1115,709	1215,733	1339,758	1455,777	1615,799	2015,839	142,6	56	91,67	36	
735,718	755,725	855,758	955,783	1055,803	1115,814	1155,820	1255,835	1379,850	1495,861	1655,875	2055,899	112,05	44	71,30	28	1,57
755,790	775,795	875,819	975,837	1075,852	1135,860	1175,865	1275,875	1399,887	1515,895	1675,905	2075,923	96,77	38	61,12	24	1,58
671,304	691,325	791,410	891,476	991,529	1051,556	1091,572	1191,608	1315,645	1431,674	1591,707	1991,766	162,97	64	101,86	40	1,60
723,637	743,647	843,689	943,722	1043,748	1103,762	1143,770	1243,789	1367,808	1483,823	1643,840	2043,872	122,23	48	76,39	30	
586,401	606,454	706,674	806,838	906,967	967,031	1007,069	1107,154	1231,239	1347,304	1507,378	1907,509	229,18	90	142,60	56	1,61
647,018	667,047	767,172	867,267	967,343	1027,381	1067,405	1167,456	1291,508	1407,548	1567,595	1967,677	183,35	72	112,05	44	1,64
763,792	783,797	883,820	983,839	1083,853	1143,861	1183,866	1283,876	1407,887	1523,896	1683,906	2083,924	91,67	36	56,02	22	
699,439	719,455	819,521	919,573	1019,615	1079,637	1119,650	1219,678	1343,708	1459,731	1619,758	2019,806	142,6	56	86,58	34	1,65
622,667	642,708	742,882	843,015	943,120	1003,172	1043,204	1143,274	1267,345	1383,400	1543,462	1943,573	203,72	80	122,23	48	1,67
751,724	771,731	871,762	971,786	1071,806	1131,817	1171,823	1271,837	1395,851	1511,863	1671,876	2071,900	101,86	40	61,12	24	
675,188	695,212	795,311	895,388	995,449	1055,481	1095,500	1195,542	1319,585	1435,618	1595,657	1995,725	162,97	64	96,77	38	1,68
739,645	759,654	859,694	959,726	1059,752	1119,765	1159,774	1259,792	1383,810	1499,825	1659,842	2059,873	112,05	44	66,21	26	1,69
727,554	747,566	847,617	947,658	1047,691	1107,707	1147,717	1247,740	1371,764	1487,782	1647,803	2047,842	122,23	48	71,30	28	1,71
759,727	779,734	879,764	979,788	1079,808	1139,818	1179,824	1279,838	1403,852	1519,863	1679,876	2079,900	96,77	38	56,02	22	1,73
524,435	544,567	645,103	745,493	845,791	905,938	946,025	1046,214	1170,404	1286,548	1446,709	1846,989	285,21	112	162,97	64	1,75
703,336	723,354	823,433	923,494	1023,544	1083,569	1123,584	1223,618	1347,654	1463,681	1623,712	2023,769	142,6	56	81,49	32	
679,064	699,091	799,205	899,293	999,364	1059,400	1099,422	1199,470	1323,520	1439,559	1599,603	1999,682	162,97	64	91,67	36	1,78
424,148	444,510	545,907	646,861	747,554	807,887	848,082	948,497	1072,904	1189,207	1349,539	1750,103	366,69	144	203,72	80	1,80
654,732	674,770	774,929	875,051	975,149	1035,198	1075,228	1175,294	1299,361	1415,414	1575,473	1975,580	183,35	72	101,86	40	
630,333	650,384	750,600	850,765	950,895	1010,961	1051,000	1151,087	1275,176	1391,245	1551,323	1951,462	203,72	80	112,05	44	1,82
755,652	775,661	875,700	975,731	1075,756	1135,769	1175,777	1275,794	1399,812	1515,827	1675,843	2075,873	101,86	40	56,02	22	
743,564	763,575	863,625	963,664	1063,695	1123,711	1163,721	1263,743	1387,766	1503,784	1663,805	2063,843	112,05	44	61,12	24	1,83
731,464	751,478	851,539	951,588	1051,627	1111,647	1151,659	1251,687	1375,715	1491,737	1651,762	2051,809	122,23	48	66,21	26	1,85
707,225	727,246	827,338	927,409	1027,467	1087,496	1127,514	1227,554	1351,595	1467,627	1627,663	2027,730	142,6	56	76,39	30	1,87
601,622	621,699	722,019	822,260	922,450	982,544	1022,601	1122,726	1246,853	1362,951	1523,061	1923,257	229,18	90	122,23	48	1,88
682,932	702,962	803,091	903,192	1003,273	1063,314	1103,339	1203,394	1327,450	1443,495	1603,545	2003,636	162,97	64	86,58	34	
658,577	678,619	778,797	878,934	979,043	1039,098	1079,132	1179,205	1303,281	1419,340	1579,407	1979,527	183,35	72	96,77	38	1,89
438,379	458,811	560,486	661,639	762,482	822,888	863,127	963,636	1088,136	1204,510	1364,920	1765,620	366,69	144	183,35	72	2,00
539,280	559,450	660,146	760,656	861,046	921,239	961,355	1061,605	1185,856	1302,047	1462,261	1862,635	285,21	112	142,60	56	
637,966	658,028	758,289	858,489	958,647	1018,727	1058,775	1158,881	1282,989	1399,073	1559,168	1959,338	203,72	80	101,86	40	
662,414	682,460	782,657	882,810	982,931	1042,993	1083,030	1183,112	1307,196	1423,262	1583,336	1983,470	183,35	72	91,67	36	
686,791	706,825	806,971	907,085	1007,176	1067,222	1107,250	1207,312	1331,377	1447,427	1607,484	2007,587	162,97	64	81,49	32	
711,106	731,131	831,235	931,318	1031,384	1091,418	1131,438	1231,484	1355,531	1471,568	1631,611	2031,687	142,6	56	71,30	28	
735,365	755,382	855,454	955,511	1055,558	1115,581	1155,596	1255,628	1379,662	1495,688	1655,718	2055,773	122,23	48	61,12	24	
747,475	767,489	867,548	967,595	1067,633	1127,652	1167,664	1267,691	1391,718	1507,740	1667,765	2067,810	112,05	44	56,02	22	
609,182	629,272	729,648	829,933	930,155	990,267	1030,335	1130,482	1254,633	1370,749	1530,879	1931,112	229,18	90	112,05	44	2,05
641,771	661,838	762,123	862,341	962,514	1022,601	1062,654	1162,770	1286,889	1402,981	1563,085	1963,272	203,72	80	96,77	38	2,11
666,242	686,294	786,511	886,680	986,814	1046,882	1086,923	1187,014	1311,107	1427,180	1587,263	1987,411	183,35	72	86,58	34	2,12
690,643	710,681	810,844	910,971	1011,073	1071,125	1111,157	1211,226	1335,298	1451,354	1611,418	2011,534	162,97	64	76,39	30	2,13
714,979	735,007	835,126	935,220	1035,295	1095,334	1135,357	1235,409	1359,463	1475,506	1635,554	2035,642	142,6	56	66,21	26	2,15
739,259	759,278	859,362	959,429	1059,483	1119,511	1159,527	1259,565	1383,604	1499,635	1659,670	2059,734	122,23	48	56,02	22	2,18
645,568	665,641	765,950	866,188	966,376	1026,471	1066,528	1166,655	1290,784	1406,884	1566,998	1967,202	203,72	80	91,67	36	2,22
452,486	472,989	574,953	676,315	777,317	837,800	878,085	978,695	1103,295	1219,744	1380,240	1781,087	366,69	144	162,97	64	2,25
616,711	636,815	737,250	837,579	937,838	997,969	1038,047	1138,219	1262,394	1378,530	1538,683	1938,955	229,18	90	101,86	40	
670,064	690,120	790,359	890,543	990,691	1050,766	1090,811	1190,911	1315,014	1431,094	1591,185	1991,349	183,35	72	81,49	32	

Table 3

	PULLEYS				Design centre distance (mm)										
R	z1	d1	z2	d2	belt: 288 RPP8 n° of teeth 36	belt: 320 RPP8 n° of teeth 40	belt: 352 RPP8 n° of teeth 44	belt: 360 RPP8 n° of teeth 45	belt: 384 RPP8 n° of teeth 48	belt: 408 RPP8 n° of teeth 51	belt: 456 RPP8 n° of teeth 57	belt: 480 RPP8 n° of teeth 60	belt: 536 RPP8 n° of teeth 67	belt: 544 RPP8 n° of teeth 68	belt: 560 RPP8 n° of teeth 70
2,29	28	71,30	64	162,97											
2,33	48	122,23	112	285,21											
	24	61,12	56	142,60										103,904	112,541
2,35	34	86,58	80	203,72											
2,37	38	96,77	90	229,18											
2,40	80	203,72	192	488,92											
	30	76,39	72	183,35											
2,46	26	66,21	64	162,97											
2,50	36	91,67	90	229,18											
	32	81,49	80	203,72											
2,55	44	112,05	112	285,21											
2,57	56	142,60	144	366,69											
	28	71,30	72	183,35											
2,65	34	86,58	90	229,18											
2,67	72	183,35	192	488,92											
	30	76,39	80	203,72											
	24	61,12	64	162,97											
2,77	26	66,21	72	183,35											
2,80	40	101,86	112	285,21											
2,81	32	81,49	90	229,18											
2,86	28	71,30	80	203,72											
2,91	22	56,02	64	162,97											
2,95	38	96,77	112	285,21											
3,00	64	162,97	192	488,92											
3,00	48	122,23	144	366,69											
3,00	30	76,39	90	229,18											
3,00	24	61,12	72	183,35											
3,08	26	66,21	80	203,72											
3,11	36	91,67	112	285,21											
3,21	28	71,30	90	229,18											
3,27	44	112,05	144	366,69											
3,27	22	56,02	72	183,35											
3,29	34	86,58	112	285,21											
3,33	24	61,12	80	203,72											
3,43	56	142,60	192	488,92											
3,46	26	66,21	90	229,18											
3,50	32	81,49	112	285,21											
3,60	40	101,86	144	366,69											
3,64	22	56,02	80	203,72											
3,73	30	76,39	112	285,21											
3,75	24	61,12	90	229,18											
3,79	38	96,77	144	366,69											
4,00	48	122,23	192	488,92											
4,00	36	91,67	144	366,69											
4,00	28	71,30	112	285,21											
4,09	22	56,02	90	229,18											
4,24	34	86,58	144	366,69											
4,31	26	66,21	112	285,21											
4,36	44	112,05	192	488,92											
4,50	32	81,49	144	366,69											
4,67	24	61,12	112	285,21											
4,80	40	101,86	192	488,92											
4,80	30	76,39	144	366,69											
5,05	38	96,77	192	488,92											
5,09	22	56,02	112	285,21											
5,14	28	71,30	144	366,69											
5,33	36	91,67	192	488,92											
5,54	26	66,21	144	366,69											
5,65	34	86,58	192	488,92											
6,00	32	81,49	192	488,92											
6,00	24	61,12	144	366,69											
6,40	30	76,39	192	488,92											
6,55	22	56,02	144	366,69											
6,86	28	71,30	192	488,92											
7,38	26	66,21	192	488,92											
8,00	24	61,12	192	488,92											
8,73	22	56,02	192	488,92											

Design centre distance (mm)											PULLEYS				
belt: 600 RPP8 n° of teeth 75	belt: 608 RPP8 n° of teeth 76	belt: 632 RPP8 n° of teeth 79	belt: 640 RPP8 n° of teeth 80	belt: 680 RPP8 n° of teeth 85	belt: 720 RPP8 n° of teeth 90	belt: 800 RPP8 n° of teeth 100	belt: 840 RPP8 n° of teeth 105	belt: 880 RPP8 n° of teeth 110	belt: 896 RPP8 n° of teeth 112	belt: 920 RPP8 n° of teeth 115	d2	z2	d1	z1	R
		123,384	127,680	148,887	169,774	211,002	231,446	251,817	259,948	272,131	162,97	64	71,3	28	2,29
											285,21	112	122,23	48	2,33
133,745	137,938	150,449	154,599	175,242	195,744	236,481	256,760	276,998	285,084	297,203	142,60	56	61,12	24	
						161,241	182,520	203,513	211,851	224,309	203,72	80	86,58	34	2,35
								171,016	179,656	192,498	229,18	90	96,77	38	2,37
											488,92	192	203,72	80	2,4
					146,099	188,357	209,125	229,748	237,966	250,265	183,35	72	76,39	30	
		126,640	130,956	152,245	173,197	214,520	235,002	255,403	263,546	275,744	162,97	64	66,21	26	2,46
								174,251	182,919	195,799	229,18	90	91,67	36	2,5
						164,512	185,858	206,907	215,265	227,750	203,72	80	81,49	32	
											285,21	112	112,05	44	2,55
											366,69	144	142,6	56	2,57
				127,479	149,365	191,757	212,574	233,239	241,472	253,791	183,35	72	71,3	28	
								177,474	186,171	199,090	229,18	90	86,58	34	2,65
											488,92	192	183,35	72	2,67
						167,770	189,184	210,288	218,666	231,178	203,72	80	76,39	30	
112,233	116,699	129,880	134,216	155,587	176,604	218,024	238,542	258,976	267,130	279,344	162,97	64	61,12	24	
				130,636	152,617	195,143	216,010	236,717	244,964	257,305	183,35	72	66,21	26	2,77
											285,21	112	101,86	40	2,8
							158,458	180,688	189,413	202,370	229,18	90	81,49	32	2,81
						171,016	192,498	213,657	222,054	234,594	203,72	80	71,3	28	2,86
115,369	119,860	133,106	137,461	158,914	179,996	221,513	242,069	262,535	270,701	282,931	162,97	64	56,02	22	2,91
											285,21	112	96,77	38	2,95
											488,92	192	162,97	64	3
											366,69	144	122,23	48	3
							161,579	183,891	192,644	205,639	229,18	90	76,39	30	3
				133,781	155,856	198,516	219,433	240,182	248,444	260,806	183,35	72	61,12	24	3
						174,251	195,799	217,014	225,431	237,998	203,72	80	66,21	26	3,08
											285,21	112	91,67	36	3,11
							164,691	187,084	195,865	208,899	229,18	90	71,3	28	3,21
											366,69	144	112,05	44	3,27
				136,913	159,083	201,876	222,843	243,634	251,912	264,295	183,35	72	56,02	22	3,27
											285,21	112	86,58	34	3,29
					132,270	177,474	199,090	220,361	228,797	241,391	203,72	80	61,12	24	3,33
											488,92	192	142,6	56	3,43
							167,793	190,268	199,077	212,149	229,18	90	66,21	26	3,46
											285,21	112	81,49	32	3,5
											366,69	144	101,86	40	3,6
					135,293	180,688	202,370	223,696	232,152	244,773	203,72	80	56,02	22	3,64
											285,21	112	76,39	30	3,73
						147,306	170,888	193,443	202,280	215,389	229,18	90	61,12	24	3,75
											366,69	144	96,77	38	3,79
											488,92	192	122,23	48	4
											366,69	144	91,67	36	4
											285,21	112	71,3	28	4
						150,290	173,974	196,609	205,473	218,620	229,18	90	56,02	22	4,09
											366,69	144	86,58	34	4,24
											285,21	112	66,21	26	4,31
											488,92	192	112,05	44	4,36
											366,69	144	81,49	32	4,5
											285,21	112	61,12	24	4,67
											488,92	192	101,86	40	4,8
											366,69	144	76,39	30	4,8
											488,92	192	96,77	38	5,05
											285,21	112	56,02	22	5,09
											366,69	144	71,3	28	5,14
											488,92	192	91,67	36	5,33
											366,69	144	66,21	26	5,54
											488,92	192	86,58	34	5,65
											488,92	192	81,49	32	6
											366,69	144	61,12	24	6
											488,92	192	76,39	30	6,4
											366,69	144	56,02	22	6,55
											488,92	192	71,3	28	6,86
											488,92	192	66,21	26	7,38
											488,92	192	61,12	24	8
											488,92	192	56,02	22	8,73

Table 3

	PULLEYS				Design centre distance (mm)											
R	z1	d1	z2	d2	belt: 960 RPP8 n° of teeth 120	belt: 1000 RPP8 n° of teeth 125	belt: 1040 RPP8 n° of teeth 130	belt: 1080 RPP8 n° of teeth 135	belt: 1120 RPP8 n° of teeth 140	belt: 1200 RPP8 n° of teeth 150	belt: 1224 RPP8 n° of teeth 153	belt: 1280 RPP8 n° of teeth 160	belt: 1352 RPP8 n° of teeth 169	belt: 1440 RPP8 n° of teeth 180	belt: 1464 RPP8 n° of teeth 183	belt: 1600 RPP8 n° of teeth 200
2,29	28	71,30	64	162,97	292,400	312,634	332,839	353,020	373,181	413,457	425,529	453,683	489,854	534,032	546,075	614,289
2,33	48	122,23	112	285,21				203,452	225,082	267,489	280,059	309,199	346,370	391,488	403,749	472,963
	24	61,12	56	142,60	317,381	337,538	357,677	377,801	397,912	438,104	450,155	478,263	514,386	558,513	570,545	638,700
2,35	34	86,58	80	203,72	244,964	265,514	285,981	306,385	326,736	367,321	379,471	407,787	444,133	488,485	500,570	568,983
2,37	38	96,77	90	229,18	213,657	234,594	255,368	276,021	296,579	337,484	349,714	378,190	414,704	459,219	471,342	539,936
2,40	80	203,72	192	488,92												
	30	76,39	72	183,35	270,701	291,074	311,397	331,680	351,929	392,350	404,460	432,691	468,948	513,211	525,276	593,590
2,46	26	66,21	64	162,97	296,037	316,292	336,516	356,714	376,890	417,191	429,270	457,439	493,627	537,822	549,870	618,105
2,50	36	91,67	90	229,18	217,014	237,998	258,813	279,500	300,089	341,046	353,288	381,792	418,337	462,884	475,015	543,646
	32	81,49	80	203,72	248,444	269,028	289,525	309,955	330,330	370,954	383,115	411,453	447,823	492,201	504,292	572,736
2,55	44	112,05	112	285,21				209,874	231,621	274,214	286,831	316,066	353,338	398,558	410,843	480,173
2,57	56	142,60	144	366,69										298,730	311,632	383,513
	28	71,30	72	183,35	274,258	294,658	315,005	335,309	355,578	396,031	408,149	436,399	472,676	516,961	529,031	597,371
2,65	34	86,58	90	229,18	220,361	241,391	262,246	282,968	303,588	344,597	356,853	385,385	421,961	466,541	478,680	547,349
2,67	72	183,35	192	488,92												
	30	76,39	80	203,72	251,912	272,530	293,058	313,514	333,913	374,577	386,748	415,109	451,504	495,908	508,006	576,481
	24	61,12	64	162,97	299,662	319,938	340,180	360,395	380,587	420,915	433,001	461,185	497,390	541,604	553,656	621,913
2,77	26	66,21	72	183,35	277,803	298,230	318,601	338,927	359,215	399,701	411,828	440,097	476,395	520,703	532,777	601,145
2,80	40	101,86	112	285,21			193,895	216,262	238,126	280,904	293,567	322,897	360,272	405,595	417,904	487,352
2,81	32	81,49	90	229,18	223,696	244,773	265,669	286,426	307,077	348,138	360,407	388,968	425,577	470,189	482,336	551,044
2,86	28	71,30	80	203,72	255,368	276,021	296,579	317,062	337,484	378,190	390,372	418,755	455,176	499,607	511,711	580,218
2,91	22	56,02	64	162,97	303,273	323,571	343,833	364,065	384,273	424,628	436,722	464,921	501,144	545,376	557,433	625,713
2,95	38	96,77	112	285,21			197,007	219,444	241,365	284,236	296,922	326,300	363,727	409,101	421,423	490,931
3,00	64	162,97	192	488,92												
3,00	48	122,23	144	366,69									263,054	311,713	324,710	397,032
3,00	30	76,39	90	229,18	227,021	248,145	269,081	289,874	310,556	351,669	363,952	392,543	429,183	473,828	485,983	554,731
3,00	24	61,12	72	183,35	281,335	301,790	322,186	342,533	362,841	403,361	415,497	443,785	480,105	524,435	536,515	604,910
3,08	26	66,21	80	203,72	258,813	279,500	300,089	320,599	341,046	381,792	393,985	422,392	458,839	503,296	515,407	583,948
3,11	36	91,67	112	285,21			200,112	222,617	244,597	287,560	300,268	329,695	367,174	412,600	424,934	494,502
3,21	28	71,30	90	229,18	230,335	251,506	272,483	293,312	314,024	355,191	367,488	396,108	432,780	477,459	489,622	558,411
3,27	44	112,05	144	366,69									269,298	318,166	331,211	403,753
3,27	22	56,02	72	183,35	284,856	305,339	325,759	346,129	366,456	407,011	419,156	447,464	483,805	528,159	540,245	608,668
3,29	34	86,58	112	285,21			203,210	225,784	247,820	290,875	303,607	333,082	370,612	416,091	428,437	498,065
3,33	24	61,12	80	203,72	262,246	282,968	303,588	324,125	344,597	385,385	397,589	426,019	462,493	506,978	519,095	587,669
3,43	56	142,60	192	488,92												
3,46	26	66,21	90	229,18	233,640	254,858	275,875	296,739	317,484	358,704	371,015	399,664	436,369	481,082	493,254	562,083
3,50	32	81,49	112	285,21		182,808	206,301	228,943	251,036	294,183	306,938	336,461	374,043	419,574	431,933	501,622
3,60	40	101,86	144	366,69								233,297	275,520	324,596	337,689	410,449
3,64	22	56,02	80	203,72	265,669	286,426	307,077	327,642	348,138	388,968	401,184	429,638	466,138	510,651	522,775	591,383
3,73	30	76,39	112	285,21		185,810	209,385	232,095	254,245	297,483	310,262	339,832	377,467	423,050	435,422	505,172
3,75	24	61,12	90	229,18	236,935	258,200	279,258	300,158	320,934	362,207	374,533	403,211	439,950	484,697	496,877	565,747
3,79	38	96,77	144	366,69								236,287	278,623	327,802	340,919	413,788
4,00	48	122,23	192	488,92												
4,00	36	91,67	144	366,69								239,272	281,720	331,003	344,143	417,122
4,00	28	71,30	112	285,21		188,806	212,463	235,240	257,447	300,776	313,578	343,196	380,883	426,519	438,903	508,715
4,09	22	56,02	90	229,18	240,222	261,533	282,632	303,567	324,375	365,702	378,042	406,750	443,522	488,304	500,492	569,405
4,24	34	86,58	144	366,69								242,252	284,813	334,198	347,362	420,450
4,31	26	66,21	112	285,21		191,796	215,535	238,378	260,641	304,062	316,886	346,553	384,292	429,981	442,378	512,252
4,36	44	112,05	192	488,92												
4,50	32	81,49	144	366,69								245,229	287,901	337,388	350,576	423,772
4,67	24	61,12	112	285,21		194,781	218,600	241,510	263,829	307,340	320,188	349,902	387,694	433,436	445,845	515,781
4,80	40	101,86	192	488,92												
4,80	30	76,39	144	366,69								248,201	290,984	340,573	353,784	427,089
5,05	38	96,77	192	488,92												
5,09	22	56,02	112	285,21	172,239	197,760	221,660	244,635	267,010	310,612	323,483	353,245	391,089	436,884	449,306	519,305
5,14	28	71,30	144	366,69								251,169	294,063	343,753	356,987	430,400
5,33	36	91,67	192	488,92												
5,54	26	66,21	144	366,69							217,726	254,133	297,137	346,928	360,185	433,707
5,65	34	86,58	192	488,92												
6,00	32	81,49	192	488,92												
6,00	24	61,12	144	366,69							220,572	257,094	300,206	350,098	363,378	437,008
6,40	30	76,39	192	488,92												
6,55	22	56,02	144	366,69							223,415	260,051	303,271	353,263	366,566	440,304
6,86	28	71,30	192	488,92												276,533
7,38	26	66,21	192	488,92												279,310
8,00	24	61,12	192	488,92												282,084
8,73	22	56,02	192	488,92												284,857

Table 3

Design centre distance (mm)												PULLEYS				
belt: 1760 RPP8 n° of teeth 220	belt: 1800 RPP8 n° of teeth 225	belt: 2000 RPP8 n° of teeth 250	belt: 2200 RPP8 n° of teeth 275	belt: 2400 RPP8 n° of teeth 300	belt: 2520 RPP8 n° of teeth 315	belt: 2600 RPP8 n° of teeth 325	belt: 2800 RPP8 n° of teeth 350	belt: 3048 RPP8 n° of teeth 381	belt: 3280 RPP8 n° of teeth 410	belt: 3600 RPP8 n° of teeth 450	belt: 4400 RPP8 n° of teeth 550	d2	z2	d1	z1	R
694,487	714,529	814,71	914,851	1014,965	1075,023	1115,058	1215,135	1339,216	1455,278	1615,35	2015,479	162,97	64	71,3	28	2,29
553,996	574,208	675,076	775,716	876,208	936,452	976,598	1076,916	1201,235	1317,479	1477,753	1878,232	285,21	112	122,23	48	2,33
718,845	738,876	839,011	939,116	1039,201	1099,245	1139,271	1239,33	1363,391	1479,439	1639,494	2039,593	142,60	56	61,12	24	
649,357	669,436	769,771	870,028	970,232	1030,335	1070,397	1170,534	1294,675	1410,784	1570,908	1971,13	203,72	80	86,58	34	2,35
620,464	640,575	741,04	841,394	941,671	1001,811	1041,896	1142,08	1266,269	1382,414	1542,579	1942,872	229,18	90	96,77	38	2,37
		432,257	536,95	640,047	701,454	742,259	843,923	969,493	1086,629	1247,843	1649,833	488,92	192	203,72	80	2,4
673,877	693,939	794,199	894,401	994,562	1054,644	1094,694	1194,803	1318,916	1435,003	1595,104	1995,283	183,35	72	76,39	30	
698,323	718,37	818,57	918,726	1018,851	1078,915	1118,954	1219,04	1343,128	1459,198	1619,277	2019,42	162,97	64	66,21	26	2,46
624,21	644,328	744,824	845,202	945,499	1005,649	1045,739	1145,937	1270,139	1386,295	1546,471	1946,786	229,18	90	91,67	36	2,5
653,139	673,224	773,585	873,862	974,082	1034,194	1074,261	1174,409	1298,562	1414,68	1574,814	1975,054	203,72	80	81,49	32	
561,309	581,543	682,501	783,21	883,756	944,027	984,189	1084,542	1208,898	1325,171	1485,476	1886,012	285,21	112	112,05	44	2,55
466,478	487,054	589,316	690,895	792,062	852,627	892,961	993,676	1118,383	1234,914	1395,5	1796,505	366,69	144	142,6	56	2,57
677,683	697,75	798,033	898,252	998,428	1058,517	1098,571	1198,691	1322,814	1438,909	1599,019	1999,215	183,35	72	71,3	28	
627,948	648,074	748,602	849,004	949,321	1009,481	1049,577	1149,788	1274,004	1390,171	1550,36	1950,697	229,18	90	86,58	34	2,65
	336,698	445,536	550,664	654,072	715,627	756,518	858,366	984,115	1101,385	1262,745	1664,985	488,92	192	183,35	72	2,67
656,913	677,005	777,392	877,69	977,927	1038,047	1078,12	1178,28	1302,444	1418,571	1578,716	1978,976	203,72	80	76,39	30	
702,152	722,203	822,423	922,594	1022,732	1082,802	1122,845	1222,939	1347,037	1463,114	1623,201	2023,359	162,97	64	61,12	24	
681,482	701,554	801,86	902,098	1002,288	1062,385	1102,444	1202,573	1326,707	1442,811	1602,93	2003,144	183,35	72	66,21	26	2,77
568,594	588,85	689,9	790,68	891,281	951,581	991,76	1092,15	1216,544	1332,846	1493,185	1893,781	285,21	112	101,86	40	2,8
631,678	651,812	752,373	852,801	953,138	1013,308	1053,41	1153,636	1277,866	1394,044	1554,245	1954,605	229,18	90	81,49	32	2,81
660,68	680,778	781,193	881,512	981,767	1041,896	1081,974	1182,145	1306,322	1422,459	1582,615	1982,895	203,72	80	71,3	28	2,86
705,974	726,03	826,269	926,456	1026,607	1086,684	1126,731	1226,834	1350,941	1467,025	1627,121	2027,295	162,97	64	56,02	22	2,91
572,225	592,493	693,591	794,406	895,036	955,35	995,538	1095,947	1220,361	1336,678	1497,034	1897,66	285,21	112	96,77	38	2,95
326,395	349,233	458,733	564,298	668,019	729,724	770,703	872,738	998,672	1116,08	1277,591	1680,089	488,92	192	162,97	64	3
480,363	501,015	603,581	705,383	806,722	867,373	907,758	1008,584	1133,403	1250,019	1410,701	1811,876	366,69	144	122,23	48	3
635,402	655,544	756,138	856,591	956,949	1017,13	1057,239	1157,478	1281,723	1397,912	1558,127	1958,51	229,18	90	76,39	30	3
685,273	705,351	805,681	905,938	1006,143	1066,248	1106,311	1206,452	1330,596	1446,709	1606,838	2007,069	183,35	72	61,12	24	3
664,44	684,544	784,987	885,329	985,601	1045,739	1085,822	1186,007	1310,196	1426,343	1586,51	1986,81	203,72	80	66,21	26	3,08
575,85	596,129	697,275	798,127	898,786	959,114	999,311	1099,74	1224,174	1340,506	1500,88	1901,537	285,21	112	91,67	36	3,11
639,119	659,268	759,896	860,376	960,755	1020,947	1061,062	1161,316	1285,576	1401,777	1562,005	1962,412	229,18	90	71,3	28	3,21
487,268	507,957	610,678	712,595	814,022	874,717	915,128	1016,012	1140,888	1257,549	1418,281	1819,543	366,69	144	112,05	44	3,27
689,057	709,14	809,495	909,772	1009,993	1070,106	1110,174	1210,325	1334,481	1450,603	1610,742	2010,992	183,35	72	56,02	22	3,27
579,469	599,759	700,953	801,842	902,53	962,874	1003,08	1103,528	1227,982	1344,33	1504,721	1905,411	285,21	112	86,58	34	3,29
668,192	688,304	788,775	889,14	989,43	1049,577	1089,666	1189,863	1314,065	1430,222	1590,401	1990,723	203,72	80	61,12	24	3,33
338,683	361,698	471,855	577,856	681,893	743,75	784,818	887,044	1013,166	1130,715	1292,382	1695,148	488,92	192	142,6	56	3,43
642,828	662,986	763,648	864,155	964,556	1024,758	1064,881	1165,149	1289,424	1405,637	1565,879	1966,311	229,18	90	66,21	26	3,46
583,08	603,382	704,625	805,552	906,27	966,628	1006,843	1107,312	1231,786	1348,15	1508,56	1909,282	285,21	112	81,49	32	3,5
494,15	514,877	617,753	719,785	821,302	882,042	922,48	1023,422	1148,357	1265,063	1425,847	1827,2	366,69	144	101,86	40	3,6
671,938	692,056	792,557	892,945	993,253	1053,41	1093,505	1193,715	1317,93	1434,098	1594,289	1994,633	203,72	80	56,02	22	3,64
586,685	606,999	708,291	809,256	910,004	970,378	1010,602	1111,091	1235,586	1351,967	1512,395	1913,15	285,21	112	76,39	30	3,73
646,531	666,697	767,394	867,929	968,351	1028,565	1068,694	1168,978	1293,269	1409,494	1569,75	1970,208	229,18	90	61,12	24	3,75
497,582	518,328	621,282	723,373	824,935	885,697	926,149	1027,12	1152,086	1268,815	1429,625	1831,024	366,69	144	96,77	38	3,79
350,91	374,099	484,906	591,342	695,697	757,707	798,866	901,286	1027,6	1145,293	1307,12	1710,162	488,92	192	122,23	48	4
501,008	521,773	624,806	726,955	828,563	889,348	929,813	1030,814	1155,81	1272,563	1433,399	1834,845	366,69	144	91,67	36	4
590,284	610,609	711,951	812,955	913,733	974,123	1014,356	1114,866	1239,382	1355,779	1516,226	1917,016	285,21	112	71,3	28	4
650,227	670,401	771,134	871,697	972,142	1032,367	1072,503	1172,803	1297,109	1413,347	1573,618	1974,101	229,18	90	56,02	22	4,09
504,429	525,213	628,325	730,533	832,186	892,994	933,473	1034,505	1159,531	1276,308	1437,17	1838,663	366,69	144	86,58	34	4,24
593,876	614,213	715,606	816,648	917,458	977,863	1018,106	1118,637	1243,175	1359,588	1520,054	1920,878	285,21	112	66,21	26	4,31
357,002	380,276	491,406	598,06	702,574	764,661	805,866	908,384	1034,794	1152,561	1314,47	1717,653	488,92	192	112,05	44	4,36
507,844	528,647	631,838	734,105	835,805	896,636	937,129	1038,191	1163,248	1280,048	1440,938	1842,479	366,69	144	81,49	32	4,5
597,463	617,812	719,255	820,336	921,177	981,598	1021,851	1122,403	1246,963	1363,393	1523,879	1924,738	285,21	112	61,12	24	4,67
363,08	386,44	497,89	604,761	709,435	771,599	812,85	915,466	1041,975	1159,815	1321,806	1725,133	488,92	192	101,86	40	4,8
511,254	532,076	635,347	737,673	839,419	900,273	940,78	1041,873	1166,961	1283,786	1444,702	1846,291	366,69	144	76,39	30	4,8
366,114	389,516	501,126	608,105	712,859	775,063	816,336	919,002	1045,56	1163,438	1325,47	1728,869	488,92	192	96,77	38	5,05
601,043	621,404	722,898	824,019	924,892	985,329	1025,592	1126,165	1250,747	1367,195	1527,7	1928,595	285,21	112	56,02	22	5,09
514,658	535,5	638,85	741,236	843,029	903,906	944,427	1045,551	1170,671	1287,519	1448,463	1850,101	366,69	144	71,3	28	5,14
369,144	392,589	504,358	611,446	716,28	778,522	819,819	922,534	1049,141	1167,056	1329,131	1732,602	488,92	192	91,67	36	5,33
518,057	538,918	642,348	744,794	846,634	907,535	948,07	1049,225	1174,376	1291,249	1452,221	1853,909	366,69	144	66,21	26	5,54
372,172	395,659	507,586	614,782	719,696	781,978	823,297	926,062	1052,719	1170,672	1332,788	1736,333	488,92	192	86,58	34	5,65
375,196	398,725	510,811	618,115	723,109	785,429	826,772	929,587	1056,294	1174,284	1336,443	1740,061	488,92	192	81,49	32	6
521,452	542,332	645,841	748,348	850,234	911,159	951,709	1052,895	1178,078	1294,976	1455,976	1857,713	366,69	144	61,12	24	6
378,217	401,788	514,032	621,444	726,518	788,877	830,244	933,108	1059,865	1177,894	1340,094	1743,787	488,92	192	76,39	30	6,4
524,841	545,74	649,33	751,897	853,831	914,78	955,343	1056,561	1181,776	1298,699	1459,727	1861,515	366,69	144	56,02	22	6,55
381,236	404,848	517,249	624,769	729,923	792,322	833,711	936,626	1063,433	1181,499	1343,743	1747,51	488,92	192	71,3	28	6,86
384,251	407,904	520,463	628,091	733,325	795,763	837,175	940,14	1066,997	1185,102	1347,388	1751,23	488,92	192	66,21	26	7,38
387,263	410,958	523,673	631,408	736,723	799,2	840,636	943,651	1070,558	1188,702	1351,031	1754,948	488,92	192	61,12	24	8
390,273	414,008	526,88	634,723	740,117	802,633	844,093	947,158	1074,116	1192,298	1354,671	1758,663	488,92	192	56,02	22	8,73

Table 3

	PULLEYS				Design centre distance (mm)							
R	z1	d1	z2	d2	belt: 966 RPP14 n° of teeth 69	belt: 994 RPP14 n° of teeth 71	belt: 1092 RPP14 n° of teeth 78	belt: 1106 RPP14 n° of teeth 79	belt: 1190 RPP14 n° of teeth 85	belt: 1260 RPP14 n° of teeth 90	belt: 1344 RPP14 n° of teeth 96	belt: 1400 RPP14 n° of teeth 100
1,00	80	356,51	80	356,51								
	72	320,86	72	320,86								
	64	285,21	64	285,21								
	56	249,55	56	249,55							280,000	308,000
	48	213,90	48	213,90				217,000	259,000	294,000	336,000	364,000
	44	196,08	44	196,08			238,000	245,000	287,000	322,000	364,000	392,000
	40	178,25	40	178,25	203,000	217,000	266,000	273,000	315,000	350,000	392,000	420,000
	38	169,34	38	169,34	217,000	231,000	280,000	287,000	329,000	364,000	406,000	434,000
	36	160,43	36	160,43	231,000	245,000	294,000	301,000	343,000	378,000	420,000	448,000
	34	151,52	34	151,52	245,000	259,000	308,000	315,000	357,000	392,000	434,000	462,000
	32	142,60	32	142,60	259,000	273,000	322,000	329,000	371,000	406,000	448,000	476,000
	30	133,69	30	133,69	273,000	287,000	336,000	343,000	385,000	420,000	462,000	490,000
	29	129,23	29	129,23	280,000	294,000	343,000	350,000	392,000	427,000	469,000	497,000
	28	124,78	28	124,78	287,000	301,000	350,000	357,000	399,000	434,000	476,000	504,000
1,03	29	129,23	30	133,69	276,491	290,491	339,493	346,493	388,494	423,494	465,495	493,495
1,04	28	124,78	29	129,23	283,491	297,492	346,493	353,493	395,494	430,494	472,495	500,495
1,05	38	169,34	40	178,25	209,953	223,956	272,964	279,965	321,969	356,972	398,975	426,977
1,06	36	160,43	38	169,34	223,956	237,958	286,965	293,966	335,970	370,973	412,976	440,977
	34	151,52	36	160,43	237,958	251,961	300,967	307,968	349,972	384,974	426,977	454,978
	32	142,60	34	151,52	251,961	265,963	314,968	321,969	363,973	398,975	440,977	468,979
1,07	30	133,69	32	142,60	265,963	279,965	328,970	335,970	377,974	412,976	454,978	482,979
	28	124,78	30	133,69	279,965	293,966	342,971	349,972	391,975	426,977	468,979	496,980
1,09	44	196,08	48	213,90			223,823	230,828	272,854	307,871	349,886	377,895
1,10	40	178,25	44	196,08	188,790	202,804	251,842	258,847	300,868	335,882	377,895	405,902
	29	129,23	32	142,60	269,417	283,421	332,433	339,434	381,441	416,446	458,451	486,454
1,11	72	320,86	80	356,51								
	36	160,43	40	178,25	216,817	230,828	279,858	286,862	328,879	363,891	405,902	433,908
1,12	34	151,52	38	169,34	230,828	244,838	293,865	300,868	342,884	377,895	419,905	447,911
	80	356,51	90	401,07								
	64	285,21	72	320,86								
1,13	32	142,60	36	160,43	244,838	258,847	307,871	314,874	356,889	391,899	433,908	461,914
	30	133,69	34	151,52	258,847	272,854	321,877	328,879	370,893	405,902	447,911	475,917
1,14	56	249,55	64	285,21								279,431
	28	124,78	32	142,60	272,854	286,862	335,882	342,884	384,897	419,905	461,914	489,919
1,16	38	169,34	44	196,08	195,543	209,573	258,654	265,664	307,710	342,739	384,768	412,783
1,17	48	213,90	56	249,55						265,401	307,483	335,526
	29	129,23	34	151,52	262,263	276,275	325,309	332,313	374,334	409,348	451,362	479,371
1,18	34	151,52	40	178,25	223,600	237,624	286,688	293,696	335,734	370,759	412,783	440,797
1,19	32	142,60	38	169,34	237,624	251,645	300,703	307,710	349,744	384,768	426,791	454,803
1,20	40	178,25	48	213,90			237,330	244,350	286,445	321,506	363,563	391,594
	30	133,69	36	160,43	251,645	265,664	314,716	321,722	363,754	398,776	440,797	468,809
1,21	28	124,78	34	151,52	265,664	279,680	328,728	335,734	377,763	412,783	454,803	482,815
1,22	36	160,43	44	196,08	202,214	216,265	265,401	272,417	314,495	349,545	391,594	419,621
1,24	29	129,23	36	160,43	255,023	269,048	318,118	325,126	367,169	402,198	444,226	472,242
1,25	72	320,86	90	401,07								
	64	285,21	80	356,51								
	32	142,60	40	178,25	230,310	244,350	293,458	300,471	342,536	377,579	419,621	447,645
1,26	38	169,34	48	213,90		194,724	243,982	251,010	293,153	328,243	370,329	398,377
1,27	44	196,08	56	249,55					243,531	278,716	320,885	348,975
	30	133,69	38	169,34	244,350	258,385	307,483	314,495	356,554	391,594	433,634	461,656
1,29	56	249,55	72	320,86								
	34	151,52	44	196,08	208,810	222,885	272,087	279,110	321,227	356,303	398,377	426,418
	28	124,78	36	160,43	258,385	272,417	321,506	328,516	370,571	405,608	447,645	475,666
1,31	29	129,23	38	169,34	247,688	261,731	310,853	317,867	359,941	394,991	437,040	465,068

Table 3

Design centre distance (mm)								PULLEYS				
belt: 1442 RPP14 n° of teeth 103	belt: 1568 RPP14 n° of teeth 112	belt: 1610 RPP14 n° of teeth 115	belt: 1764 RPP14 n° of teeth 126	belt: 1778 RPP14 n° of teeth 127	belt: 1890 RPP14 n° of teeth 135	belt: 1960 RPP14 n° of teeth 140	belt: 2100 RPP14 n° of teeth 150	d2	z2	d1	z1	R
					385,000	420,000	490,000	356,51	80	356,51	80	1,00
			378,000	385,000	441,000	476,000	546,000	320,86	72	320,86	72	
	336,000	357,000	434,000	441,000	497,000	532,000	602,000	285,21	64	285,21	64	
329,000	392,000	413,000	490,000	497,000	553,000	588,000	658,000	249,55	56	249,55	56	
385,000	448,000	469,000	546,000	553,000	609,000	644,000	714,000	213,90	48	213,90	48	
413,000	476,000	497,000	574,000	581,000	637,000	672,000	742,000	196,08	44	196,08	44	
441,000	504,000	525,000	602,000	609,000	665,000	700,000	770,000	178,25	40	178,25	40	
455,000	518,000	539,000	616,000	623,000	679,000	714,000	784,000	169,34	38	169,34	38	
469,000	532,000	553,000	630,000	637,000	693,000	728,000	798,000	160,43	36	160,43	36	
483,000	546,000	567,000	644,000	651,000	707,000	742,000	812,000	151,52	34	151,52	34	
497,000	560,000	581,000	658,000	665,000	721,000	756,000	826,000	142,60	32	142,60	32	
511,000	574,000	595,000	672,000	679,000	735,000	770,000	840,000	133,69	30	133,69	30	
518,000	581,000	602,000	679,000	686,000	742,000	777,000	847,000	129,23	29	129,23	29	
525,000	588,000	609,000	686,000	693,000	749,000	784,000	854,000	124,78	28	124,78	28	
514,495	577,496	598,496	675,496	682,496	738,497	773,497	843,497	133,69	30	129,23	29	1,03
521,495	584,496	605,496	682,496	689,496	745,497	780,497	850,497	129,23	29	124,78	28	1,04
447,978	510,981	531,981	608,984	615,984	671,985	706,986	776,987	178,25	40	169,34	38	1,05
461,979	524,981	545,982	622,984	629,984	685,986	720,986	790,987	169,34	38	160,43	36	1,06
475,979	538,982	559,982	636,984	643,985	699,986	734,986	804,988	160,43	36	151,52	34	
489,980	552,982	573,983	650,985	657,985	713,986	748,987	818,988	151,52	34	142,60	32	
503,980	566,982	587,983	664,985	671,985	727,986	762,987	832,988	142,60	32	133,69	30	1,07
517,981	580,983	601,984	678,985	685,986	741,987	776,987	846,988	133,69	30	124,78	28	
398,900	461,914	482,918	559,929	566,930	622,936	657,940	727,945	213,90	48	196,08	44	1,09
426,907	489,919	510,922	587,932	594,933	650,939	685,942	755,947	196,08	44	178,25	40	1,10
507,456	570,461	591,462	668,467	675,467	731,469	766,471	836,473	142,60	32	129,23	29	
			349,545	356,554	412,615	447,645	517,693	356,51	80	320,86	72	1,11
454,913	517,923	538,926	615,936	622,936	678,941	713,944	783,949	178,25	40	160,43	36	
468,915	531,925	552,928	629,937	636,938	692,943	727,945	797,950	169,34	38	151,52	34	1,12
						384,354	454,454	401,07	90	356,51	80	
	307,483	328,516	405,608	412,615	468,661	503,685	573,723	320,86	72	285,21	64	
482,918	545,927	566,930	643,938	650,939	706,944	741,946	811,951	160,43	36	142,60	32	1,13
496,920	559,929	580,932	657,940	664,940	720,945	755,947	825,952	151,52	34	133,69	30	
300,471	363,563	384,587	461,656	468,661	524,697	559,716	629,748	285,21	64	249,55	56	1,14
510,922	573,931	594,933	671,941	678,941	734,946	769,948	839,953	142,60	32	124,78	28	
433,794	496,820	517,827	594,850	601,852	657,864	692,871	762,883	196,08	44	169,34	38	1,16
356,554	419,621	440,639	517,693	524,697	580,726	615,742	685,768	249,55	56	213,90	48	1,17
500,376	563,390	584,394	661,406	668,407	724,414	759,418	829,425	151,52	34	129,23	29	
461,806	524,830	545,836	622,857	629,858	685,870	720,876	790,887	178,25	40	151,52	34	1,18
475,812	538,834	559,840	636,860	643,861	699,872	734,878	804,889	169,34	38	142,60	32	1,19
412,615	475,666	496,680	573,723	580,726	636,750	671,763	741,786	213,90	48	178,25	40	1,20
489,818	552,838	573,844	650,863	657,864	713,875	748,881	818,891	160,43	36	133,69	30	
503,823	566,842	587,848	664,866	671,867	727,877	762,883	832,893	151,52	34	124,78	28	1,21
440,639	503,685	524,697	601,736	608,739	664,761	699,773	769,794	196,08	44	160,43	36	1,22
493,253	556,281	577,289	654,314	661,316	717,330	752,338	822,352	160,43	36	129,23	29	1,24
					375,858	411,042	481,328	401,07	90	320,86	72	1,25
			376,310	383,341	439,553	474,661	544,833	356,51	80	285,21	64	
468,661	531,701	552,713	629,748	636,750	692,771	727,782	797,801	178,25	40	142,60	32	
419,408	482,485	503,507	580,572	587,577	643,614	678,634	748,668	213,90	48	169,34	38	1,26
370,034	433,175	454,213	531,327	538,336	594,399	629,432	699,489	249,55	56	196,08	44	1,27
482,671	545,709	566,720	643,753	650,756	706,775	741,786	811,804	169,34	38	133,69	30	
	334,096	355,209	432,530	439,553	495,717	530,802	600,942	320,86	72	249,55	56	1,29
447,445	510,514	531,533	608,592	615,597	671,630	706,649	776,680	196,08	44	151,52	34	
496,680	559,716	580,726	657,758	664,761	720,780	755,790	825,808	160,43	36	124,78	28	
486,086	549,134	570,147	647,189	654,193	710,217	745,230	815,253	169,34	38	129,23	29	1,31

Table 3

	PULLEYS				Design centre distance (mm)							
R	z1	d1	z2	d2	belt: 2240 RPP14 n° of teeth 160	belt: 2310 RPP14 n° of teeth 165	belt: 2380 RPP14 n° of teeth 170	belt: 2450 RPP14 n° of teeth 175	belt: 2590 RPP14 n° of teeth 185	belt: 2660 RPP14 n° of teeth 190	belt: 2800 RPP14 n° of teeth 200	belt: 3150 RPP14 n° of teeth 225
1,00	80	356,51	80	356,51	560,000	595,000	630,000	665,000	735,000	770,000	840,000	1015,000
	72	320,86	72	320,86	616,000	651,000	686,000	721,000	791,000	826,000	896,000	1071,000
	64	285,21	64	285,21	672,000	707,000	742,000	777,000	847,000	882,000	952,000	1127,000
	56	249,55	56	249,55	728,000	763,000	798,000	833,000	903,000	938,000	1008,000	1183,000
	48	213,90	48	213,90	784,000	819,000	854,000	889,000	959,000	994,000	1064,000	1239,000
	44	196,08	44	196,08	812,000	847,000	882,000	917,000	987,000	1022,000	1092,000	1267,000
	40	178,25	40	178,25	840,000	875,000	910,000	945,000	1015,000	1050,000	1120,000	1295,000
	38	169,34	38	169,34	854,000	889,000	924,000	959,000	1029,000	1064,000	1134,000	1309,000
	36	160,43	36	160,43	868,000	903,000	938,000	973,000	1043,000	1078,000	1148,000	1323,000
	34	151,52	34	151,52	882,000	917,000	952,000	987,000	1057,000	1092,000	1162,000	1337,000
	32	142,60	32	142,60	896,000	931,000	966,000	1001,000	1071,000	1106,000	1176,000	1351,000
	30	133,69	30	133,69	910,000	945,000	980,000	1015,000	1085,000	1120,000	1190,000	1365,000
	29	129,23	29	129,23	917,000	952,000	987,000	1022,000	1092,000	1127,000	1197,000	1372,000
	28	124,78	28	124,78	924,000	959,000	994,000	1029,000	1099,000	1134,000	1204,000	1379,000
1,03	29	129,23	30	133,69	913,497	948,497	983,497	1018,498	1088,498	1123,498	1193,498	1368,498
1,04	28	124,78	29	129,23	920,497	955,497	990,497	1025,498	1095,498	1130,498	1200,498	1375,498
1,05	38	169,34	40	178,25	846,988	881,989	916,989	951,990	1021,990	1056,991	1126,991	1301,992
1,06	36	160,43	38	169,34	860,988	895,989	930,989	965,990	1035,990	1070,991	1140,991	1315,992
	34	151,52	36	160,43	874,989	909,989	944,989	979,990	1049,991	1084,991	1154,991	1329,993
	32	142,60	34	151,52	888,989	923,989	958,990	993,990	1063,991	1098,991	1168,992	1343,993
1,07	30	133,69	32	142,60	902,989	937,989	972,990	1007,990	1077,991	1112,991	1182,992	1357,993
	28	124,78	30	133,69	916,989	951,990	986,990	1021,990	1091,991	1126,991	1196,992	1371,993
1,09	44	196,08	48	213,90	797,950	832,952	867,954	902,956	972,959	1007,961	1077,963	1252,968
1,10	40	178,25	44	196,08	825,952	860,954	895,956	930,957	1000,960	1035,962	1105,964	1280,969
	29	129,23	32	142,60	906,475	941,476	976,477	1011,478	1081,479	1116,480	1186,481	1361,484
1,11	72	320,86	80	356,51	587,730	622,745	657,758	692,771	762,792	797,801	867,817	1042,848
	36	160,43	40	178,25	853,953	888,955	923,957	958,959	1028,961	1063,963	1133,965	1308,970
1,12	34	151,52	38	169,34	867,954	902,956	937,958	972,959	1042,962	1077,963	1147,965	1322,970
	80	356,51	90	401,07	524,527	559,556	594,582	629,606	699,645	734,662	804,691	979,747
	64	285,21	72	320,86	643,753	678,766	713,777	748,788	818,806	853,814	923,828	1098,855
1,13	32	142,60	36	160,43	881,955	916,957	951,958	986,960	1056,962	1091,964	1161,966	1336,970
	30	133,69	34	151,52	895,956	930,957	965,959	1000,960	1070,963	1105,964	1175,966	1350,971
1,14	56	249,55	64	285,21	699,773	734,784	769,794	804,803	874,818	909,825	979,838	1154,862
	28	124,78	32	142,60	909,956	944,958	979,959	1014,961	1084,963	1119,965	1189,967	1364,971
1,16	38	169,34	44	196,08	832,893	867,897	902,901	937,905	1007,911	1042,914	1112,920	1287,931
1,17	48	213,90	56	249,55	755,790	790,799	825,808	860,815	930,829	965,836	1035,847	1210,869
	29	129,23	34	151,52	899,431	934,434	969,436	1004,438	1074,442	1109,444	1179,447	1354,454
1,18	34	151,52	40	178,25	860,896	895,900	930,904	965,907	1035,914	1070,917	1140,922	1315,932
1,19	32	142,60	38	169,34	874,898	909,902	944,905	979,909	1049,915	1084,918	1154,923	1329,933
1,20	40	178,25	48	213,90	811,804	846,812	881,820	916,827	986,839	1021,845	1091,854	1266,875
	30	133,69	36	160,43	888,899	923,903	958,907	993,910	1063,916	1098,919	1168,924	1343,934
1,21	28	124,78	34	151,52	902,901	937,905	972,908	1007,911	1077,917	1112,920	1182,924	1357,934
1,22	36	160,43	44	196,08	839,811	874,818	909,825	944,832	1014,843	1049,849	1119,858	1294,877
1,24	29	129,23	36	160,43	892,364	927,369	962,374	997,378	1067,386	1102,390	1172,396	1347,410
1,25	72	320,86	90	401,07	551,541	586,628	621,706	656,775	726,893	761,944	832,033	1007,201
	64	285,21	80	356,51	614,966	650,022	685,072	720,117	790,196	825,230	895,290	1070,406
	32	142,60	40	178,25	867,817	902,824	937,831	972,837	1042,848	1077,853	1147,862	1322,880
1,26	38	169,34	48	213,90	818,697	853,709	888,721	923,731	993,750	1028,759	1098,774	1273,805
1,27	44	196,08	56	249,55	769,535	804,556	839,574	874,591	944,622	979,635	1049,659	1224,708
30	133,69	38	169,34	881,820	916,827	951,833	986,839	1056,850	1091,854	1161,863	1336,881	
1,29	56	249,55	72	320,86	671,053	706,100	741,142	776,181	846,249	881,279	951,332	1126,436
	34	151,52	44	196,08	846,707	881,718	916,729	951,739	1021,757	1056,765	1126,780	1301,809
	28	124,78	36	160,43	895,823	930,829	965,836	1000,841	1070,852	1105,856	1175,865	1350,882
1,31	29	129,23	38	169,34	885,273	920,282	955,290	990,297	1060,310	1095,316	1165,327	1340,350

Table 3

Design centre distance (mm)							PULLEYS				
belt: 3360 RPP14 n° of teeth 240	belt: 3500 RPP14 n° of teeth 250	belt: 3850 RPP14 n° of teeth 275	belt: 3920 RPP14 n° of teeth 280	belt: 4326 RPP14 n° of teeth 309	belt: 4578 RPP14 n° of teeth 327	belt: 4956 RPP14 n° of teeth 354,000	d2	z2	d1	z1	R
1120,000	1190,000	1365,000	1400,000	1603,000	1729	1918,000	356,51	80	356,51	80	1,00
1176,000	1246,000	1421,000	1456,000	1659,000	1785	1974,000	320,86	72	320,86	72	
1232,000	1302,000	1477,000	1512,000	1715,000	1841	2030,000	285,21	64	285,21	64	
1288,000	1358,000	1533,000	1568,000	1771,000	1897	2086,000	249,55	56	249,55	56	
1344,000	1414,000	1589,000	1624,000	1827,000	1953,000	2142,000	213,90	48	213,90	48	
1372,000	1442,000	1617,000	1652,000	1855,000	1981,000	2170,000	196,08	44	196,08	44	
1400,000	1470,000	1645,000	1680,000	1883,000	2009,000	2198,000	178,25	40	178,25	40	
1414,000	1484,000	1659,000	1694,000	1897,000	2023,000	2212,000	169,34	38	169,34	38	
1428,000	1498,000	1673,000	1708,000	1911,000	2037,000	2226,000	160,43	36	160,43	36	
1442,000	1512,000	1687,000	1722,000	1925,000	2051,000	2240,000	151,52	34	151,52	34	
1456,000	1526,000	1701,000	1736,000	1939,000	2065,000	2254,000	142,60	32	142,60	32	
1470,000	1540,000	1715,000	1750,000	1953,000	2079,000	2268,000	133,69	30	133,69	30	
1477,000	1547,000	1722,000	1757,000	1960,000	2086,000	2275,000	129,23	29	129,23	29	
1484,000	1554,000	1729,000	1764,000	1967,000	2093,000	2282,000	124,78	28	124,78	28	
1473,498	1543,498	1718,499	1753,499	1956,499	2082,499	2271,499	133,69	30	129,23	29	1,03
1480,498	1550,498	1725,499	1760,499	1963,499	2089,499	2278,499	129,23	29	124,78	28	1,04
1406,993	1476,993	1651,994	1686,994	1889,995	2015,995	2204,995	178,25	40	169,34	38	1,05
1420,993	1490,993	1665,994	1700,994	1903,995	2029,995	2218,996	169,34	38	160,43	36	1,06
1434,993	1504,993	1679,994	1714,994	1917,995	2043,995	2232,996	160,43	36	151,52	34	
1448,993	1518,993	1693,994	1728,994	1931,995	2057,995	2246,996	151,52	34	142,60	32	
1462,993	1532,994	1707,994	1742,994	1945,995	2071,995	2260,996	142,60	32	133,69	30	1,07
1476,993	1546,994	1721,994	1756,994	1959,995	2085,995	2274,996	133,69	30	124,78	28	
1357,971	1427,972	1602,975	1637,976	1840,978	1966,98	2155,982	213,90	48	196,08	44	1,09
1385,971	1455,973	1630,976	1665,976	1868,979	1994,98	2183,982	196,08	44	178,25	40	1,10
1466,485	1536,485	1711,487	1746,487	1949,489	2075,489	2264,49	142,60	32	129,23	29	
1147,862	1217,87	1392,886	1427,889	1630,903	1756,91	1945,918	356,51	80	320,86	72	1,11
1413,972	1483,973	1658,976	1693,977	1896,979	2022,98	2211,982	178,25	40	160,43	36	
1427,972	1497,973	1672,976	1707,977	1910,979	2036,981	2225,982	169,34	38	151,52	34	1,12
1084,771	1154,785	1329,813	1364,818	1567,842	1693,853	1882,868	401,07	90	356,51	80	
1203,868	1273,875	1448,89	1483,893	1686,906	1812,912	2001,921	320,86	72	285,21	64	
1441,972	1511,974	1686,976	1721,977	1924,979	2050,981	2239,982	160,43	36	142,60	32	1,13
1455,973	1525,974	1700,977	1735,977	1938,98	2064,981	2253,982	151,52	34	133,69	30	
1259,874	1329,881	1504,894	1539,897	1742,909	1868,915	2057,923	285,21	64	249,55	56	1,14
1469,973	1539,974	1714,977	1749,977	1952,98	2078,981	2267,982	142,60	32	124,78	28	
1392,936	1462,939	1637,945	1672,947	1875,952	2001,955	2190,959	196,08	44	169,34	38	1,16
1315,879	1385,885	1560,898	1595,9	1798,912	1924,917	2113,925	249,55	56	213,90	48	1,17
1459,457	1529,459	1704,464	1739,464	1942,468	2068,47	2257,473	151,52	34	129,23	29	
1420,937	1490,94	1665,946	1700,947	1903,953	2029,956	2218,96	178,25	40	151,52	34	1,18
1434,938	1504,941	1679,947	1714,948	1917,953	2043,956	2232,96	169,34	38	142,60	32	1,19
1371,884	1441,89	1616,902	1651,904	1854,914	1980,92	2169,927	213,90	48	178,25	40	1,20
1448,938	1518,941	1693,947	1728,948	1931,954	2057,957	2246,96	160,43	36	133,69	30	
1462,939	1532,942	1707,948	1742,949	1945,954	2071,957	2260,96	151,52	34	124,78	28	1,21
1399,887	1469,892	1644,903	1679,905	1882,916	2008,921	2197,928	196,08	44	160,43	36	1,22
1452,416	1522,42	1697,428	1732,43	1935,437	2061,441	2250,446	160,43	36	129,23	29	1,24
1112,277	1182,32	1357,407	1392,422	1595,496	1721,533	1910,579	401,07	90	320,86	72	1,25
1175,459	1245,49	1420,553	1455,563	1658,617	1784,644	1973,678	356,51	80	285,21	64	
1427,889	1497,894	1672,905	1707,907	1910,917	2036,922	2225,929	178,25	40	142,60	32	
1378,82	1448,829	1623,847	1658,85	1861,867	1987,875	2176,886	213,90	48	169,34	38	1,26
1329,731	1399,745	1574,773	1609,778	1812,803	1938,816	2127,832	249,55	56	196,08	44	1,27
1441,89	1511,895	1686,906	1721,908	1924,917	2050,923	2239,929	169,34	38	133,69	30	
1231,484	1301,512	1476,57	1511,58	1714,629	1840,655	2029,687	320,86	72	249,55	56	1,29
1406,824	1476,832	1651,85	1686,853	1889,869	2015,877	2204,887	196,08	44	151,52	34	
1455,891	1525,896	1700,907	1735,908	1938,918	2064,923	2253,93	160,43	36	124,78	28	
1445,361	1515,367	1690,381	1725,383	1928,396	2054,402	2243,41	169,34	38	129,23	29	1,31

Table 3

	PULLEYS				Design centre distance (mm)							
R	z1	d1	z2	d2	belt: 966 RPP14 n° of teeth 69	belt: 994 RPP14 n° of teeth 71	belt: 1092 RPP14 n° of teeth 78	belt: 1106 RPP14 n° of teeth 79	belt: 1190 RPP14 n° of teeth 85	belt: 1260 RPP14 n° of teeth 90	belt: 1344 RPP14 n° of teeth 96	belt: 1400 RPP14 n° of teeth 100
1,33	48	213,9	64	285,21							277,709	305,92
	36	160,43	48	213,9	187,086	201,221	250,572	257,611	299,807	334,932	377,052	405,117
	30	133,69	40	178,25	236,952	251,01	300,173	307,192	349,289	384,354	426,418	454,454
1,36	28	124,78	38	169,34	251,01	265,063	314,21	321,227	363,317	398,377	440,436	468,47
1,38	32	142,6	44	196,08	215,338	229,44	278,716	285,748	327,909	363,015	405,117	433,175
	29	129,23	40	178,25	240,249	254,318	303,51	310,532	352,648	387,725	429,801	457,844
1,4	80	356,51	112	499,11								
	40	178,25	56	249,55				214,024	256,519	291,82	334,096	362,244
1,41	64	285,21	90	401,07								
	34	151,52	48	213,9	193,48	207,652	257,105	264,156	306,411	341,575	383,731	411,818
1,43	56	249,55	80	356,51								
	28	124,78	40	178,25	243,531	257,611	306,834	313,86	355,995	391,086	433,175	461,225
1,45	44	196,08	64	285,21						247,985	290,576	318,881
1,47	38	169,34	56	249,55			213,217	220,34	262,935	298,3	340,636	368,817
	30	133,69	44	196,08	221,803	235,935	285,293	292,334	334,545	369,683	411,818	439,893
1,5	48	213,9	72	320,86								274,78
	32	142,6	48	213,9	199,811	214,024	263,585	270,649	312,967	348,173	390,371	418,481
1,52	29	129,23	44	196,08	225,013	239,161	288,562	295,609	337,845	373,002	415,154	443,239
1,56	72	320,86	112	499,11								
	36	160,43	56	249,55			219,46	226,604	269,304	304,736	347,136	375,351
1,57	28	124,78	44	196,08	228,21	242,373	291,82	298,871	341,135	376,31	418,481	446,576
1,6	40	178,25	64	285,21						260,491	303,273	331,68
	30	133,69	48	213,9	206,085	220,34	270,016	277,092	319,479	354,73	396,972	425,107
1,61	56	249,55	90	401,07								
1,64	44	196,08	72	320,86							258,432	287,196
1,65	34	151,52	56	249,55			225,654	232,82	275,629	311,13	353,597	381,849
1,66	29	129,23	48	213,9	209,202	223,478	273,213	280,297	322,719	357,994	400,259	428,407
1,67	48	213,9	80	356,51								
1,68	38	169,34	64	285,21					230,687	266,682	309,563	338,023
1,71	28	124,78	48	213,9	212,306	226,604	276,4	283,49	325,949	361,248	403,537	431,698
1,75	64	285,21	112	499,11								
	32	142,6	56	249,55			231,804	238,992	281,913	317,486	360,021	388,312
1,78	36	160,43	64	285,21					236,73	272,835	315,817	344,332
1,8	80	356,51	144	641,71								
	40	178,25	72	320,86							270,549	299,471
1,82	44	196,08	80	356,51								
1,87	30	133,69	56	249,55			237,911	245,122	288,157	323,804	366,411	394,741
1,88	48	213,9	90	401,07								
	34	151,52	64	285,21					242,737	278,952	322,037	350,608
1,89	38	169,34	72	320,86							276,557	305,56
1,93	29	129,23	56	249,55		189,888	240,95	248,172	291,265	326,949	369,593	397,944
2	72	320,86	144	641,71								
	56	249,55	112	499,11								
	40	178,25	80	356,51								
	36	160,43	72	320,86							282,535	311,618
	32	142,6	64	285,21					248,708	285,035	328,225	356,853
	28	124,78	56	249,55		192,816	243,979	251,212	294,363	330,086	372,767	401,139
2,05	44	196,08	90	401,07								
2,11	38	169,34	80	356,51								270,654
2,12	34	151,52	72	320,86						244,167	288,483	317,647
2,13	30	133,69	64	285,21				210,194	254,646	291,085	334,381	363,067
2,21	29	129,23	64	285,21				213,061	257,603	294,098	337,448	366,163
2,22	36	160,43	80	356,51								276,425
2,25	64	285,21	144	641,71								

Table 3

Design centre distance (mm)								PULLEYS				
belt: 1442 RPP14 n° of teeth 103	belt: 1568 RPP14 n° of teeth 112	belt: 1610 RPP14 n° of teeth 115	belt: 1764 RPP14 n° of teeth 126	belt: 1778 RPP14 n° of teeth 127	belt: 1890 RPP14 n° of teeth 135	belt: 1960 RPP14 n° of teeth 140	belt: 2100 RPP14 n° of teeth 150	d2	z2	d1	z1	R
327,055	390,371	411,455	488,699	495,717	551,848	586,917	657,033	285,21	64	213,90	48	1,33
426,161	489,269	510,299	587,391	594,399	650,450	685,478	755,527	213,90	48	160,43	36	
475,478	538,539	559,556	636,610	643,614	699,645	734,662	804,691	178,25	40	133,69	30	
489,493	552,551	573,567	650,618	657,622	713,652	748,668	818,697	169,34	38	124,78	28	1,36
454,213	517,309	538,336	615,419	622,426	678,473	713,499	783,544	196,08	44	142,60	32	1,38
478,873	541,946	562,966	640,031	647,036	703,073	738,093	808,128	178,25	40	129,23	29	
								499,11	112	356,51	80	1,4
383,341	446,576	467,640	544,833	551,848	607,954	643,011	713,109	249,55	56	178,25	40	
				345,126	401,816	437,156	507,691	401,07	90	285,21	64	1,41
432,876	496,019	517,059	594,181	601,191	657,260	692,297	762,362	213,90	48	151,52	34	
	303,273	324,585	402,442	409,503	465,928	501,144	571,496	356,51	80	249,55	56	1,43
482,259	545,344	566,369	643,444	650,450	706,494	741,518	811,559	178,25	40	124,78	28	
340,076	403,537	424,660	502,021	509,048	565,242	600,345	670,519	285,21	64	196,08	44	1,45
389,936	453,224	474,303	551,541	558,559	614,691	649,762	719,882	249,55	56	169,34	38	1,47
460,944	524,071	545,107	622,218	629,227	685,290	720,324	790,384	196,08	44	133,69	30	
296,159	360,021	381,243	458,881	465,928	522,260	557,433	627,721	320,86	72	213,90	48	1,5
439,553	502,735	523,786	600,942	607,954	664,043	699,091	769,174	213,90	48	142,60	32	
464,297	527,441	548,481	625,607	632,617	688,689	723,728	793,796	196,08	44	129,23	29	1,52
								499,11	112	320,86	72	1,56
396,493	459,839	480,934	558,220	565,242	621,401	656,487	726,633	249,55	56	160,43	36	
467,640	530,802	551,848	628,989	636,001	692,082	727,126	797,203	196,08	44	124,78	28	1,57
352,941	416,563	437,729	515,222	522,260	578,527	613,669	683,908	285,21	64	178,25	40	1,6
446,196	509,420	530,483	607,676	614,691	670,801	705,860	775,963	213,90	48	133,69	30	
			363,067	370,222	427,266	462,785	533,613	401,07	90	249,55	56	1,61
308,673	372,767	394,051	471,870	478,931	535,361	570,586	640,961	320,86	72	196,08	44	1,64
403,015	466,422	487,534	564,872	571,898	628,086	663,188	733,361	249,55	56	151,52	34	1,65
449,505	512,751	533,820	611,033	618,049	674,170	709,236	779,350	213,90	48	129,23	29	1,66
	328,225	349,706	428,048	435,145	491,822	527,171	597,742	356,51	80	213,90	48	1,67
359,320	423,027	444,217	521,781	528,824	585,130	620,293	690,569	285,21	64	169,34	38	1,68
452,805	516,075	537,150	614,383	621,401	677,534	712,606	782,731	213,90	48	124,78	28	1,71
							420,318	499,11	112	285,21	64	1,75
409,503	472,974	494,103	571,496	578,527	634,746	669,864	740,067	249,55	56	142,60	32	
365,665	429,460	450,675	528,312	535,361	591,708	626,893	697,207	285,21	64	160,43	36	1,78
								641,71	144	356,51	80	1,8
321,049	385,385	406,734	484,747	491,822	548,358	583,639	654,110	320,86	72	178,25	40	
	340,507	362,078	440,679	447,796	504,611	540,032	610,725	356,51	80	196,08	44	1,82
415,959	479,496	500,644	578,095	585,130	641,382	676,518	746,752	249,55	56	133,69	30	1,87
		307,654	387,648	394,857	452,283	487,999	559,150	401,07	90	213,90	48	1,88
371,978	435,864	457,104	534,817	541,872	598,262	633,470	703,823	285,21	64	151,52	34	
327,190	391,650	413,033	491,146	498,229	554,820	590,131	660,652	320,86	72	169,34	38	1,89
419,175	482,746	503,904	581,385	588,422	644,691	679,836	750,086	249,55	56	129,23	29	1,93
								641,71	144	320,86	72	2
							444,363	499,11	112	249,55	56	
287,049	352,677	374,339	453,208	460,345	517,303	552,799	623,620	356,51	80	178,25	40	
333,300	397,887	419,304	497,520	504,611	561,258	596,599	667,172	320,86	72	160,43	36	
378,260	442,240	463,505	541,297	548,358	604,792	640,024	710,419	285,21	64	142,60	32	
422,384	485,990	507,158	584,668	591,708	647,994	683,149	753,415	249,55	56	124,78	28	
		319,409	399,788	407,025	464,649	500,467	571,789	401,07	90	196,08	44	2,05
292,920	358,722	380,430	459,436	466,583	523,615	559,150	630,037	356,51	80	169,34	38	2,11
339,382	404,097	425,549	503,869	510,969	567,674	603,046	673,672	320,86	72	151,52	34	2,12
384,513	448,588	469,880	547,753	554,820	611,300	646,557	716,994	285,21	64	133,69	30	2,13
387,628	451,752	473,057	550,972	558,042	614,545	649,815	720,274	285,21	64	129,23	29	2,21
298,765	364,743	386,498	465,640	472,798	529,905	565,480	356,51	356,51	80	160,43	36	2,22
							641,71	641,71	144	285,21	64	2,25

Table 3

	PULLEYS				Design centre distance (mm)							
R	z1	d1	z2	d2	belt: 2240 RPP14 n° of teeth 160	belt: 2310 RPP14 n° of teeth 165	belt: 2380 RPP14 n° of teeth 170	belt: 2450 RPP14 n° of teeth 175	belt: 2590 RPP14 n° of teeth 185	belt: 2660 RPP14 n° of teeth 190	belt: 2800 RPP14 n° of teeth 200	belt: 3150 RPP14 n° of teeth 225
1,33	48	213,9	64	285,21	727,126	762,166	797,203	832,236	902,296	937,322	1007,369	1182,463
	36	160,43	48	213,9	825,567	860,585	895,601	930,616	1000,643	1035,655	1105,677	1280,721
	30	133,69	40	178,25	874,716	909,727	944,737	979,747	1049,764	1084,771	1154,785	1329,813
1,36	28	124,78	38	169,34	888,721	923,731	958,741	993,75	1063,767	1098,774	1168,788	1343,815
1,38	32	142,6	44	196,08	853,581	888,598	923,613	958,627	1028,652	1063,664	1133,685	1308,727
	29	129,23	40	178,25	878,158	913,171	948,183	983,194	1053,215	1088,224	1158,241	1333,275
1,4	80	356,51	112	499,11	442,24	477,668	513,037	548,358	618,888	654,11	724,489	900,175
	40	178,25	56	249,55	783,188	818,223	853,255	888,284	958,337	993,36	1063,402	1238,487
1,41	64	285,21	90	401,07	578,095	613,262	648,41	683,544	753,773	788,872	859,046	1034,377
	34	151,52	48	213,9	832,415	867,439	902,461	937,481	1007,517	1042,533	1112,563	1287,622
1,43	56	249,55	80	356,51	641,771	676,887	711,991	747,085	817,25	852,322	922,45	1097,697
	28	124,78	40	178,25	881,594	916,61	951,624	986,638	1056,662	1091,673	1161,692	1336,733
1,45	44	196,08	64	285,21	740,659	775,72	810,775	845,826	915,916	950,956	1021,027	1196,17
1,47	38	169,34	56	249,55	789,982	825,025	860,065	895,101	965,167	1000,196	1070,248	1245,354
	30	133,69	44	196,08	860,434	895,457	930,477	965,496	1035,53	1070,545	1140,573	1315,63
1,5	48	213,9	72	320,86	697,95	733,049	768,138	803,219	873,362	908,426	978,538	1153,76
	32	142,6	48	213,9	839,243	874,273	909,301	944,327	1014,373	1049,394	1119,432	1294,509
1,52	29	129,23	44	196,08	863,853	898,879	933,902	968,923	1038,962	1073,98	1144,012	1319,077
1,56	72	320,86	112	499,11	467,478	503,084	538,609	574,067	644,831	680,152	750,703	926,711
	36	160,43	56	249,55	796,753	831,806	866,854	901,899	971,978	1007,014	1077,078	1252,207
1,57	28	124,78	44	196,08	867,267	902,296	937,322	972,346	1042,39	1077,41	1147,446	1322,519
1,6	40	178,25	64	285,21	754,103	789,188	824,265	859,336	929,461	964,517	1034,618	1209,818
	30	133,69	48	213,9	846,049	881,087	916,122	951,154	1021,212	1056,238	1126,286	1301,382
1,61	56	249,55	90	401,07	604,245	639,507	674,743	709,954	780,32	815,479	885,758	1061,295
1,64	44	196,08	72	320,86	711,262	746,391	781,508	816,616	886,804	921,888	992,038	1167,332
1,65	34	151,52	56	249,55	803,504	838,567	873,624	908,677	978,772	1013,815	1083,891	1259,046
1,66	29	129,23	48	213,9	849,445	884,487	919,525	954,561	1024,625	1059,654	1129,707	1304,813
1,67	48	213,9	80	356,51	668,192	703,383	738,556	773,712	843,986	879,107	949,321	1124,739
1,68	38	169,34	64	285,21	760,793	795,891	830,98	866,062	936,207	971,272	1041,388	1216,62
1,71	28	124,78	48	213,9	852,835	887,881	922,924	957,963	1028,034	1063,066	1133,124	1308,241
1,75	64	285,21	112	499,11	492,337	528,133	563,825	599,433	670,451	705,882	776,624	952,992
	32	142,6	56	249,55	810,235	845,308	880,375	915,438	985,549	1020,599	1090,689	1265,87
1,78	36	160,43	64	285,21	767,463	802,574	837,676	872,769	942,935	978,009	1048,143	1223,409
1,8	80	356,51	144	641,71						526,57	598,942	777,892
	40	178,25	72	320,86	724,489	759,651	794,8	829,935	900,175	935,281	1005,471	1180,847
1,82	44	196,08	80	356,51	681,272	716,505	751,716	786,908	857,244	892,392	962,656	1138,172
1,87	30	133,69	56	249,55	816,945	852,03	887,108	922,18	992,308	1027,366	1097,471	1272,681
1,88	48	213,9	90	401,07	630,037	665,408	700,742	736,043	806,565	841,793	912,195	1087,973
	34	151,52	64	285,21	774,112	809,238	844,353	879,458	949,646	984,73	1054,881	1230,183
1,89	38	169,34	72	320,86	731,071	766,252	801,417	836,567	906,834	941,952	1012,164	1187,583
1,93	29	129,23	56	249,55	820,293	855,384	890,467	925,544	995,682	1030,744	1100,856	1276,082
2	72	320,86	144	641,71					513,741	550,452	623,236	802,919
	56	249,55	112	499,11	516,864	552,858	588,727	624,492	695,781	731,329	802,277	979,038
	40	178,25	80	356,51	694,271	729,549	764,801	800,03	870,433	905,611	975,927	1151,549
	36	160,43	72	320,86	737,634	772,833	808,015	843,182	913,476	948,607	1018,841	1194,305
	32	142,6	64	285,21	780,742	815,882	851,011	886,13	956,341	991,435	1061,605	1236,944
	28	124,78	56	249,55	823,636	858,733	893,822	928,904	999,051	1034,117	1104,237	1279,479
2,05	44	196,08	90	401,07	642,811	678,241	713,627	748,976	819,583	854,848	925,318	1101,227
2,11	38	169,34	80	356,51	700,742	736,043	771,316	806,565	877,002	912,195	982,54	1158,217
2,12	34	151,52	72	320,86	744,178	779,396	814,596	849,778	920,101	955,245	1025,503	1201,014
2,13	30	133,69	64	285,21	787,353	822,509	857,652	892,784	963,019	998,124	1068,313	1243,692
2,21	29	129,23	64	285,21	790,651	825,815	860,966	896,104	966,352	1001,462	1071,661	1247,061
2,22	36	160,43	80	356,51	707,193	742,518	777,813	813,082	883,555	918,764	989,137	1164,872
2,25	64	285,21	144	641,71					537,142	574,098	647,297	827,731

Table 3

Design centre distance (mm)							PULLEYS				
belt: 3360 RPP14 n° of teeth 240	belt: 3500 RPP14 n° of teeth 250	belt: 3850 RPP14 n° of teeth 275	belt: 3920 RPP14 n° of teeth 280	belt: 4326 RPP14 n° of teeth 309	belt: 4578 RPP14 n° of teeth 327	belt: 4956 RPP14 n° of teeth 354	d2	z2	d1	z1	R
1287,506	1357,532	1532,585	1567,595	1770,641	1896,665	2085,695	285,21	64	213,90	48	1,33
1385,742	1455,754	1630,781	1665,785	1868,809	1994,821	2183,836	213,90	48	160,43	36	
1434,827	1504,835	1679,852	1714,855	1917,871	2043,879	2232,889	178,25	40	133,69	30	
1448,829	1518,837	1693,853	1728,856	1931,872	2057,879	2246,890	169,34	38	124,78	28	1,36
1413,747	1483,759	1658,784	1693,789	1896,812	2022,823	2211,838	196,08	44	142,60	32	1,38
1438,291	1508,301	1683,322	1718,325	1921,344	2047,353	2236,366	178,25	40	129,23	29	
1005,471	1075,636	1250,967	1286,023	1489,293	1615,426	1804,591	499,11	112	356,51	80	1,4
1343,527	1413,550	1588,600	1623,609	1826,652	1952,675	2141,703	249,55	56	178,25	40	
1139,527	1209,612	1384,788	1419,818	1622,966	1749,040	1938,134	401,07	90	285,21	64	1,41
1392,651	1462,667	1637,703	1672,709	1875,741	2001,757	2190,778	213,90	48	151,52	34	
1202,811	1272,877	1448,012	1483,036	1686,152	1812,211	2001,285	356,51	80	249,55	56	1,43
1441,752	1511,764	1686,788	1721,792	1924,814	2050,826	2239,840	178,25	40	124,78	28	
1301,237	1371,276	1546,358	1581,372	1784,444	1910,480	2099,527	285,21	64	196,08	44	1,45
1350,404	1420,434	1595,496	1630,507	1833,561	1959,590	2148,626	249,55	56	169,34	38	1,47
1420,658	1490,674	1665,708	1700,714	1903,744	2029,760	2218,781	196,08	44	133,69	30	
1258,864	1328,924	1504,049	1539,071	1742,179	1868,235	2057,305	320,86	72	213,90	48	1,5
1399,546	1469,568	1644,614	1679,622	1882,662	2008,684	2197,711	213,90	48	142,60	32	
1424,108	1494,126	1669,165	1704,172	1907,207	2033,225	2222,249	196,08	44	129,23	29	1,52
1032,150	1102,395	1277,891	1312,974	1516,380	1642,581	1831,831	499,11	112	320,86	72	1,56
1357,268	1427,304	1602,380	1637,394	1840,460	1966,495	2155,539	249,55	56	160,43	36	
1427,555	1497,576	1672,620	1707,628	1910,667	2036,688	2225,714	196,08	44	124,78	28	1,57
1314,912	1384,967	1560,083	1595,104	1798,205	1924,257	2113,323	285,21	64	178,25	40	1,6
1406,428	1476,455	1651,513	1686,523	1889,574	2015,601	2204,635	213,90	48	133,69	30	
1166,539	1236,679	1411,967	1447,016	1650,261	1776,384	1965,540	401,07	90	249,55	56	1,61
1272,470	1342,550	1517,718	1552,746	1755,892	1881,966	2071,060	320,86	72	196,08	44	1,64
1364,119	1434,162	1609,253	1644,269	1847,350	1973,391	2162,444	249,55	56	151,52	34	1,65
1409,864	1479,894	1654,958	1689,970	1893,027	2019,056	2208,094	213,90	48	129,23	29	1,66
1229,933	1300,044	1475,277	1510,317	1713,516	1839,618	2028,747	356,51	80	213,90	48	1,67
1321,730	1391,794	1566,929	1601,952	1805,070	1931,131	2120,208	285,21	64	169,34	38	1,68
1413,297	1483,331	1658,401	1693,414	1896,476	2022,509	2211,551	213,90	48	124,78	28	1,71
1058,593	1128,930	1304,614	1339,729	1543,293	1669,573	1858,922	499,11	112	285,21	64	1,75
1370,957	1441,008	1616,115	1651,134	1854,229	1980,278	2169,341	249,55	56	142,60	32	
1328,535	1398,608	1573,763	1608,790	1811,926	1937,996	2127,085	285,21	64	160,43	36	1,78
884,479	955,337	1132,006	1167,278	1371,580	1498,208	1687,973	641,71	144	356,51	80	1,8
1286,023	1356,125	1531,340	1566,377	1769,563	1895,659	2084,781	320,86	72	178,25	40	
1243,412	1313,550	1488,839	1523,888	1727,137	1853,264	2042,425	356,51	80	196,08	44	1,82
1377,782	1447,841	1622,966	1657,988	1861,098	1987,155	2176,229	249,55	56	133,69	30	1,87
1193,329	1263,533	1438,956	1474,028	1677,389	1803,572	1992,802	401,07	90	213,90	48	1,88
1335,327	1405,410	1580,586	1615,617	1818,771	1944,851	2133,953	285,21	64	151,52	34	
1292,780	1362,894	1538,134	1573,176	1776,384	1902,491	2091,628	320,86	72	169,34	38	1,89
1381,190	1451,253	1626,387	1661,411	1864,529	1990,591	2179,670	249,55	56	129,23	29	1,93
909,819	980,851	1157,868	1193,199	1397,783	1524,551	1714,489	641,71	144	320,86	72	2
1084,816	1155,255	1331,148	1366,298	1570,039	1696,409	1885,871	499,11	112	249,55	56	
1256,839	1327,006	1502,356	1537,416	1740,718	1866,872	2056,068	356,51	80	178,25	40	
1299,524	1369,650	1544,917	1579,963	1783,196	1909,315	2098,467	320,86	72	160,43	36	
1342,106	1412,200	1587,398	1622,433	1825,607	1951,697	2140,813	285,21	64	142,60	32	
1384,594	1454,662	1629,806	1664,831	1867,958	1994,024	2183,108	249,55	56	124,78	28	
1206,644	1276,884	1452,382	1487,467	1690,893	1817,109	2006,381	401,07	90	196,08	44	2,05
1263,533	1333,715	1509,097	1544,163	1747,494	1873,662	2062,877	356,51	80	169,34	38	2,11
1306,255	1376,395	1551,689	1586,740	1789,997	1916,129	2105,297	320,86	72	151,52	34	2,12
1348,872	1418,977	1594,200	1629,238	1832,434	1958,535	2147,664	285,21	64	133,69	30	2,13
1352,251	1422,362	1597,596	1632,637	1835,843	1961,950	2151,086	285,21	64	129,23	29	2,21
1270,215	1340,413	1515,828	1550,900	1754,260	1880,444	2069,678	356,51	80	160,43	36	2,22
934,956	1006,169	1183,551	1218,943	1423,827	1550,744	1740,866	641,71	144	285,21	64	2,25

Table 3

	PULLEYS				Design centre distance (mm)							
R	z1	d1	z2	d2	belt: 966 RPP14 n° of teeth 69	belt: 994 RPP14 n° of teeth 71	belt: 1092 RPP14 n° of teeth 78	belt: 1106 RPP14 n° of teeth 79	belt: 1190 RPP14 n° of teeth 85	belt: 1260 RPP14 n° of teeth 90	belt: 1344 RPP14 n° of teeth 96	belt: 1400 RPP14 n° of teeth 100
2,25	40	178,25	90	401,07								
	32	142,60	72	320,86						249,933	294,403	323,649
2,29	28	124,78	64	285,21			208,360	215,921	260,552	297,104	340,507	369,253
2,33	48	213,90	112	499,11								
	34	151,52	80	356,51								282,171
2,37	38	169,34	90	401,07								
2,40	80	356,51	192	855,62								
	30	133,69	72	320,86						255,674	300,296	329,624
2,48	29	129,23	72	320,86						258,534	303,234	332,602
2,50	36	160,43	90	401,07								
	32	142,60	80	356,51							257,447	287,895
2,55	44	196,08	112	499,11								
2,57	56	249,55	144	641,71								
	28	124,78	72	320,86					223,089	261,389	306,165	335,574
2,65	34	151,52	90	401,07								
2,67	72	320,86	192	855,62								
	30	133,69	80	356,51							263,033	293,597
2,76	29	129,23	80	356,51							265,818	296,440
2,80	40	178,25	112	499,11								
2,81	32	142,60	90	401,07								
2,86	28	124,78	80	356,51							268,599	299,278
2,95	38	169,34	112	499,11								
3,00	64	285,21	192	855,62								
	48	213,90	144	641,71								
	30	133,69	90	401,07								
3,10	29	129,23	90	401,07								
3,11	36	160,43	112	499,11								
3,21	28	124,78	90	401,07								
3,27	44	196,08	144	641,71								
3,29	34	151,52	112	499,11								
3,43	56	249,55	192	855,62								
3,50	32	142,60	112	499,11								
3,60	40	178,25	144	641,71								
3,73	30	133,69	112	499,11								
3,79	38	169,34	144	641,71								
3,86	29	129,23	112	499,11								
4,00	48	213,90	192	855,62								
	36	160,43	144	641,71								
	28	124,78	112	499,11								
4,24	34	151,52	144	641,71								
4,36	44	196,08	192	855,62								
4,50	32	142,60	144	641,71								
4,80	40	178,25	192	855,62								
	30	133,69	144	641,71								
4,97	29	129,23	144	641,71								
5,05	38	169,34	192	855,62								
5,14	28	124,78	144	641,71								
5,33	36	160,43	192	855,62								
5,65	34	151,52	192	855,62								
6,00	32	142,60	192	855,62								
6,40	30	133,69	192	855,62								
6,62	29	129,23	192	855,62								
6,86	28	124,78	192	855,62								

Table 3

Design centre distance (mm)								PULLEYS				
belt: 1442 RPP14 n° of teeth 103	belt: 1568 RPP14 n° of teeth 112	belt: 1610 RPP14 n° of teeth 115	belt: 1764 RPP14 n° of teeth 126	belt: 1778 RPP14 n° of teeth 127	belt: 1890 RPP14 n° of teeth 135	belt: 1960 RPP14 n° of teeth 140	belt: 2100 RPP14 n° of teeth 150	d2	z2	d1	z1	R
	308,667	331,072	411,837	419,103	476,928	512,851	584,347	401,07	90	178,25	40	2,25
345,437	410,281	431,768	510,195	517,303	574,067	609,472	680,152	320,86	72	142,60	32	
390,737	454,909	476,228	554,185	561,258	617,785	653,068	723,549	285,21	64	124,78	28	2,29
					356,040	393,893	468,106	499,11	112	213,90	48	2,33
304,586	370,739	392,541	471,823	478,991	536,173	571,789	642,811	356,51	80	151,52	34	2,35
	314,398	336,871	417,830	425,110	483,036	519,013	590,598	401,07	90	169,34	38	2,37
								855,62	192	356,51	80	2,40
351,466	416,440	437,963	516,499	523,615	580,439	615,876	686,613	320,86	72	133,69	30	
354,471	419,511	441,052	519,642	526,762	583,618	619,071	689,836	320,86	72	129,23	29	2,48
	320,109	342,649	423,802	431,097	489,125	525,155	596,830	401,07	90	160,43	36	2,50
310,384	376,713	398,562	477,984	485,163	542,421	578,078	649,170	356,51	80	142,60	32	
					367,280	405,337	479,875	499,11	112	196,08	44	2,55
								641,71	144	249,55	56	2,57
357,470	422,575	444,135	522,780	529,905	586,791	622,261	693,054	320,86	72	124,78	28	
	325,800	348,408	429,755	437,065	495,195	531,279	603,044	401,07	90	151,52	34	2,65
								855,62	192	320,86	72	2,67
316,160	382,665	404,561	484,124	491,314	548,649	584,347	655,510	356,51	80	133,69	30	
319,040	385,633	407,552	487,186	494,382	551,756	587,475	658,673	356,51	80	129,23	29	2,76
					378,458	416,720	491,582	499,11	112	178,25	40	2,80
	331,473	354,148	435,689	443,013	501,246	537,384	609,241	401,07	90	142,60	32	2,81
321,914	388,595	410,539	490,243	497,444	554,858	590,598	661,832	356,51	80	124,78	28	2,86
					384,026	422,389	497,413	499,11	112	169,34	38	2,95
								855,62	192	285,21	64	3,00
								641,71	144	213,90	48	
266,736	337,127	359,869	441,605	448,943	507,279	543,472	615,421	401,07	90	133,69	30	
269,427	339,948	362,723	444,556	451,901	510,289	546,510	618,505	401,07	90	129,23	29	3,10
					389,580	428,044	503,229	499,11	112	160,43	36	3,11
272,114	342,764	365,573	447,502	454,855	513,295	549,543	621,584	401,07	90	124,78	28	3,21
								641,71	144	196,08	44	3,27
				331,264	395,121	433,686	509,032	499,11	112	151,52	34	3,29
								855,62	192	249,55	56	3,43
			328,297	336,590	400,650	439,314	514,820	499,11	112	142,60	32	3,50
								641,71	144	178,25	40	3,60
			333,581	341,905	406,165	444,929	520,596	499,11	112	133,69	30	3,73
								641,71	144	169,34	38	3,79
			336,220	344,558	408,919	447,732	523,479	499,11	112	129,23	29	3,86
								855,62	192	213,90	48	4,00
								641,71	144	160,43	36	
			338,855	347,209	411,669	450,532	526,358	499,11	112	124,78	28	
								641,71	144	151,52	34	4,24
								855,62	192	196,08	44	4,36
								641,71	144	142,60	32	4,50
								855,62	192	178,25	40	4,80
								641,71	144	133,69	30	
								641,71	144	129,23	29	4,97
								855,62	192	169,34	38	5,05
								641,71	144	124,78	28	5,14
								855,62	192	160,43	36	5,33
								855,62	192	151,52	34	5,65
								855,62	192	142,60	32	6,00
								855,62	192	133,69	30	6,40
								855,62	192	129,23	29	6,62
								855,62	192	124,78	28	6,86

Table 3

	PULLEYS				Design centre distance (mm)							
R	z1	d1	z2	d2	belt: 2240 RPP14 n° of teeth 160	belt: 2310 RPP14 n° of teeth 165	belt: 2380 RPP14 n° of teeth 170	belt: 2450 RPP14 n° of teeth 175	belt: 2590 RPP14 n° of teeth 185	belt: 2660 RPP14 n° of teeth 190	belt: 2800 RPP14 n° of teeth 200	belt: 3150 RPP14 n° of teeth 225
2,25	40	178,25	90	401,07	655,510	690,999	726,440	761,839	832,535	867,839	938,379	1114,427
	32	142,60	72	320,86	750,703	785,941	821,158	856,358	926,711	961,868	1032,150	1207,710
2,29	28	124,78	64	285,21	793,944	829,117	864,275	899,421	969,680	1004,797	1075,006	1250,426
2,33	48	213,90	112	499,11	541,098	577,296	613,347	649,276	720,848	756,520	827,685	1004,864
2,35	34	151,52	80	356,51	713,627	748,976	784,293	819,583	890,092	925,318	995,720	1171,513
2,37	38	169,34	90	401,07	661,832	697,352	732,821	768,246	838,987	874,311	944,887	1121,007
2,40	80	356,51	192	855,62								
	30	133,69	72	320,86	757,210	792,468	827,704	862,920	933,304	968,475	1038,782	1214,392
2,48	29	129,23	72	320,86	760,456	795,725	830,970	866,196	936,595	971,773	1042,092	1217,729
2,50	36	160,43	90	401,07	668,136	703,688	739,186	774,637	845,423	880,769	951,381	1127,574
	32	142,60	80	356,51	720,042	755,416	790,756	826,067	896,614	931,856	1002,288	1178,142
2,55	44	196,08	112	499,11	553,115	589,416	625,560	661,573	733,290	769,025	840,303	1017,700
2,57	56	249,55	144	641,71			446,178	484,776	560,329	597,530	671,148	852,345
	28	124,78	72	320,86	763,698	798,977	834,233	869,467	939,882	975,067	1045,399	1221,062
2,65	34	151,52	90	401,07	674,424	710,007	745,534	781,011	851,845	887,211	957,861	1134,129
2,67	72	320,86	192	855,62								589,221
	30	133,69	80	356,51	726,440	761,839	797,203	832,535	903,120	938,379	1008,842	1184,758
2,76	29	129,23	80	356,51	729,633	765,045	800,420	835,763	906,367	941,635	1012,114	1188,061
2,80	40	178,25	112	499,11	565,070	601,475	637,712	673,810	745,675	781,474	852,866	1030,487
2,81	32	142,60	90	401,07	680,695	716,310	751,866	787,370	858,252	893,639	964,327	1140,671
2,86	28	124,78	80	356,51	732,821	768,246	803,633	838,987	909,611	944,887	1015,382	1191,361
2,95	38	169,34	112	499,11	571,025	607,483	643,767	679,907	751,846	787,679	859,129	1036,862
3,00	64	285,21	192	855,62								611,157
	48	213,90	144	641,71		428,394	468,232	507,186	583,322	620,768	694,806	876,775
	30	133,69	90	401,07	686,949	722,597	758,182	793,714	864,644	900,053	970,780	1147,201
3,10	29	129,23	90	401,07	690,071	725,735	761,335	796,880	867,834	903,254	974,001	1150,462
3,11	36	160,43	112	499,11	576,966	613,476	649,807	685,990	758,004	793,869	865,378	1043,226
3,21	28	124,78	90	401,07	693,188	728,869	764,484	800,043	871,022	906,452	977,219	1153,719
3,27	44	196,08	144	641,71		439,155	479,197	518,326	594,752	632,320	706,567	888,925
3,29	34	151,52	112	499,11	582,893	619,455	655,834	692,060	764,149	800,047	871,615	1049,578
3,43	56	249,55	192	855,62								632,971
3,50	32	142,60	112	499,11	588,806	625,421	661,847	698,117	770,281	806,213	877,839	1055,918
3,60	40	178,25	144	641,71	408,270	449,880	490,122	529,425	606,140	643,829	718,285	901,034
3,73	30	133,69	112	499,11	594,706	631,374	667,848	704,160	776,401	812,365	884,051	1062,248
3,79	38	169,34	144	641,71	413,502	455,229	495,571	534,960	611,818	649,568	724,129	907,073
3,86	29	129,23	112	499,11	597,651	634,345	670,843	707,177	779,456	815,437	887,153	1065,408
4,00	48	213,90	192	855,62								654,673
	36	160,43	144	641,71	418,725	460,569	501,011	540,486	617,487	655,297	729,963	913,103
	28	124,78	112	499,11	600,593	637,314	673,835	710,191	782,507	818,506	890,252	1068,566
4,24	34	151,52	144	641,71	423,941	465,902	506,442	546,003	623,146	661,016	735,787	919,122
4,36	44	196,08	192	855,62								665,484
4,50	32	142,60	144	641,71	429,150	471,226	511,864	551,510	628,795	666,726	741,601	925,133
4,80	40	178,25	192	855,62								676,269
	30	133,69	144	641,71	434,351	476,542	517,278	557,009	634,436	672,427	747,406	931,133
4,97	29	129,23	144	641,71	436,949	479,197	519,982	559,755	637,253	675,273	750,304	934,130
5,05	38	169,34	192	855,62								681,653
5,14	28	124,78	144	641,71	439,546	481,851	522,684	562,499	640,067	678,118	753,201	937,125
5,33	36	160,43	192	855,62								687,031
5,65	34	151,52	192	855,62								692,402
6,00	32	142,60	192	855,62								697,768
6,40	30	133,69	192	855,62								703,129
6,62	29	129,23	192	855,62							481,503	705,807
6,86	28	124,78	192	855,62							483,933	708,483

Table 3

Design centre distance (mm)							PULLEYS				
belt: 3360 RPP14 n° of teeth 240	belt: 3500 RPP14 n° of teeth 250	belt: 3850 RPP14 n° of teeth 275	belt: 3920 RPP14 n° of teeth 280	belt: 4326 RPP14 n° of teeth 309	belt: 4578 RPP14 n° of teeth 327	belt: 4956 RPP14 n° of teeth 354	d2	z2	d1	z1	R
1219,909	1290,187	1465,764	1500,863	1704,357	1830,609	2019,927	401,07	90	178,25	40	2,25
1312,974	1383,127	1558,451	1593,507	1796,789	1922,934	2112,119	320,86	72	142,60	32	
1355,626	1425,743	1600,990	1636,033	1839,251	1965,363	2154,507	285,21	64	124,78	28	2,29
1110,834	1181,383	1357,503	1392,693	1596,627	1723,096	1912,682	499,11	112	213,90	48	2,33
1276,884	1347,099	1522,549	1557,627	1761,016	1887,216	2076,470	356,51	80	151,52	34	2,35
1226,523	1296,821	1472,439	1507,545	1711,076	1837,346	2026,687	401,07	90	169,34	38	2,37
681,797	756,449	939,663	975,915	1184,615	1313,216	1505,266	855,62	192	356,51	80	2,40
1319,680	1389,848	1565,202	1600,263	1803,572	1929,730	2118,933	320,86	72	133,69	30	
1323,029	1393,204	1568,573	1603,637	1806,959	1933,125	2122,337	320,86	72	129,23	29	2,48
1233,125	1303,443	1479,103	1514,217	1717,784	1844,073	2033,439	401,07	90	160,43	36	2,50
1283,541	1353,773	1529,259	1564,342	1767,764	1893,979	2083,254	356,51	80	142,60	32	
1123,770	1194,377	1370,617	1405,827	1609,865	1736,385	1926,037	499,11	112	196,08	44	2,55
959,903	1031,303	1209,065	1244,521	1449,720	1576,793	1767,110	641,71	144	249,55	56	2,57
1326,375	1396,557	1571,942	1607,009	1810,345	1936,518	2125,739	320,86	72	124,78	28	
1239,715	1310,053	1485,757	1520,879	1724,484	1850,792	2040,183	401,07	90	151,52	34	2,65
704,633	779,687	963,662	1000,038	1209,319	1338,198	1530,586	855,62	192	320,86	72	2,67
1290,187	1360,436	1535,958	1571,048	1774,502	1900,734	2090,030	356,51	80	133,69	30	
1293,505	1363,763	1539,304	1574,397	1777,867	1904,108	2093,415	356,51	80	129,23	29	2,76
1136,660	1207,325	1383,689	1418,921	1623,065	1749,640	1939,361	499,11	112	178,25	40	2,80
1246,294	1316,653	1492,401	1527,530	1731,174	1857,503	2046,919	401,07	90	142,60	32	2,81
1296,821	1367,087	1542,647	1577,744	1781,230	1907,480	2096,798	356,51	80	124,78	28	2,86
1143,087	1213,783	1390,211	1425,453	1629,652	1756,254	1946,011	499,11	112	169,34	38	2,95
727,330	802,783	987,521	1024,020	1233,889	1363,051	1555,784	855,62	192	285,21	64	3,00
984,674	1056,266	1234,420	1269,942	1475,467	1602,704	1793,227	641,71	144	213,90	48	
1252,860	1323,241	1499,035	1534,171	1737,855	1864,204	2053,647	401,07	90	133,69	30	
1256,139	1326,531	1502,347	1537,488	1741,192	1867,552	2057,008	401,07	90	129,23	29	3,10
1149,504	1220,231	1396,722	1431,975	1636,229	1762,860	1952,652	499,11	112	160,43	36	3,11
1259,416	1329,818	1505,658	1540,803	1744,527	1870,897	2060,367	401,07	90	124,78	28	3,21
996,996	1068,687	1247,040	1282,597	1488,289	1615,611	1806,239	641,71	144	196,08	44	3,27
1155,910	1226,667	1403,223	1438,488	1642,798	1769,458	1959,287	499,11	112	151,52	34	3,29
749,896	825,746	1011,247	1047,870	1258,333	1387,782	1580,867	855,62	192	249,55	56	3,43
1162,304	1233,093	1409,715	1444,991	1649,358	1776,047	1965,913	499,11	112	142,60	32	3,50
1009,279	1081,068	1259,624	1295,215	1501,078	1628,485	1819,221	641,71	144	178,25	40	3,60
1168,688	1239,509	1416,197	1451,485	1655,910	1782,628	1972,532	499,11	112	133,69	30	3,73
1015,405	1087,244	1265,902	1301,510	1507,459	1634,910	1825,701	641,71	144	169,34	38	3,79
1171,877	1242,713	1419,435	1454,729	1659,182	1785,916	1975,839	499,11	112	129,23	29	3,86
772,340	848,585	1034,849	1071,596	1282,656	1412,396	1605,838	855,62	192	213,90	48	4,00
1021,522	1093,411	1272,172	1307,797	1513,833	1641,327	1832,174	641,71	144	160,43	36	
1175,062	1245,915	1422,670	1457,970	1662,453	1789,201	1979,143	499,11	112	124,78	28	
1027,630	1099,568	1278,432	1314,075	1520,198	1647,737	1838,639	641,71	144	151,52	34	4,24
783,519	859,960	1046,604	1083,414	1294,774	1424,661	1618,283	855,62	192	196,08	44	4,36
1033,728	1105,717	1284,684	1320,345	1526,556	1654,139	1845,098	641,71	144	142,60	32	4,50
794,671	871,307	1058,331	1095,203	1306,864	1436,898	1630,701	855,62	192	178,25	40	4,80
1039,817	1111,856	1290,928	1326,607	1532,906	1660,534	1851,549	641,71	144	133,69	30	
1042,859	1114,923	1294,047	1329,734	1536,078	1663,728	1854,772	641,71	144	129,23	29	4,97
800,237	876,970	1064,184	1101,087	1312,898	1443,006	1636,901	855,62	192	169,34	38	5,05
1045,897	1117,987	1297,163	1332,860	1539,248	1666,921	1857,993	641,71	144	124,78	28	5,14
805,796	882,627	1070,030	1106,964	1318,926	1449,108	1643,094	855,62	192	160,43	36	5,33
811,349	888,276	1075,869	1112,834	1324,947	1455,204	1649,281	855,62	192	151,52	34	5,65
816,895	893,919	1081,701	1118,698	1330,962	1461,292	1655,462	855,62	192	142,60	32	6,00
822,435	899,556	1087,527	1124,555	1336,970	1467,375	1661,637	855,62	192	133,69	30	6,40
825,203	902,372	1090,437	1127,481	1339,971	1470,414	1664,722	855,62	192	129,23	29	6,62
827,969	905,186	1093,346	1130,405	1342,971	1473,451	1667,805	855,62	192	124,78	28	6,86

ISORAN RPP PULLEYS

The RPP pulley tooth profile, designed and perfected by Megadyne along with those of the belts, are the determining factors in the perfect functioning of the drive.
The introduction of the parabolic profile on the new ISORAN RPP pulleys can be considered an evolution in the design of timing pulleys. The trend in design is towards more compact drives. The standard tooth profile has shown poor performance with reduced pulley diametres. The new drive design is more compact therefore it is necessary to use pulleys with smaller diameters. Producing the pulleys according to traditional procedures the following limitation can be found.
Decreasing the diameter of the pulley, the profile of the groove forms an edge at the tip radius (fig.6).
This brings about:

a) reduction of the contact surface between the belt and the pulley, the teeth and therefore a local increase of stress (fig.8);

b) more wear of the belt at the base of the tooth.
For building RPP pulleys with parabolic profile Megadyne has patented a system which permits constant profiles even by reduced diameters and free from discontinuity on the top of the tooth (fig.7).

Fig. 6

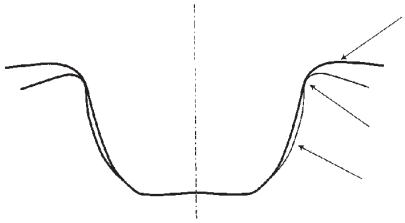

Fig. 7

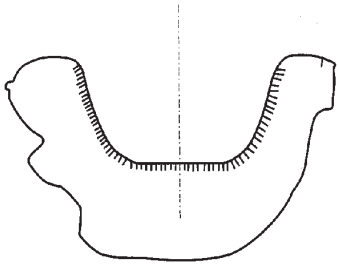

Fig. 8

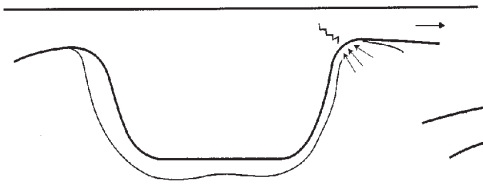

Fig. 9

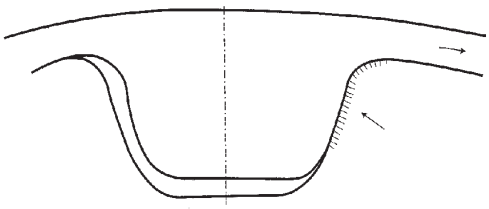

Therefore:
1. The new ISORAN RPP pulleys allows a larger contact surface with the tooth of the belt (fig.9);
2. the new ISORAN RPP pulley reduces belt wear during mesh.

NOTE: THE PREVIOUS PANTHER BELT GENERATION DOESN'T WORK WITH THE NEW GOLD RPP PULLEYS OVER 100 TEETH. THIS ALSO MEANS THAT THE NEW GOLD BELT DOESN'T WORK WITH OLD RPP PANTHER PULLEYS OVER 100 TEETH.

ISORAN RPP pulleys are also used with RPP SILVER belts, as mentioned above. This gives advantages in terms of availability and supply, and at the same time allows drives to be upgraded where belt drive durability problems have been experienced. As consequence our RPP pulleys offers the designers the flexibility to choose between a huge range of different performing belts without the necessity to change the pulleys.

Megadyne RPP pulleys are constructed from high quality materials, and manufactured under high standards of quality control with particular attention to the tight dimensional tolerances required. The pulley teeth are designed to mesh and conform exactly to those of the belt, resulting in a drive which functions with a minimum backlash as a precision gear system. Extensive testing and market feedback confirms the reliable nature of the RPP GOLD system.

When ISORAN RPP pulleys are used with RPP GOLD belts the drive efficiency can be further improved by considering the following advantages:
1. The pulley width can be reduced whilst transmitting the same torque;
2. alternatively there is the possibility to reduce the pulley diameters whilst maintaining the same belt width;
3. by using the same pulleys as used with an ISORAN RPP drive, the torque transmitted can be increased or the drive durability can be extended.

An ISORAN RPP pulley is designated by:
a) - Number of teeth
b) - Pitch of the pulley teeth
c) - Width of the pulley

The pitch of the pulley teeth is the distance between tooth centres as measured along the pulley's pitch circle diameter (PCD).
The PCD of the pulley coincides with the pitch line of the belt, and is therefore always larger than the outside diameter of the pulley.
RPP pulleys are stocked in 8 mm and 14 mm pitches.
Standard pulleys sizes are listed in table 14. A typical pulley designation is detailed below:

40-RPP14-55

Where:
d) 40 = Number of pulley teeth
e) RPP = Tooth profile
f) 14 = Tooth pitch in millimetres
g) 55 = Corresponding belt width in millimetres

All standard pulleys are designed, where possible, to be used in conjunction with taper-bushes, and for each pulley size it is necessary to select the correct taper-bush. The use of taper-bushes allows each pulley to be fitted to a variety of shaft sizes without the need to machine or otherwise modify the pulley beforehand.
Pulleys are available with Taper-bushes fit both metric or imperial (inch sized) shafts.
However, for high torque applications, is not recommended to use standard bushes because severe tension conditions can be reached under particular circumstances, in case of driven shaft rapid blockage

Table 14

DIMENSIONS OF ISORAN RPP GOLD PULLEYS – PITCH 8 mm

PULLEY CODE	NUMBER OF TEETH	Dw PITCH DIAMETER	De EXTERNAL DIAMETER	De Blanks 04/10	De Blanks 5/10
22 GLD8	22	56.02	54.65	55.05	55.15
23 GLD8	23	58.57	57.20	57.60	57.70
24 GLD8	24	61.12	59.74	60.14	60.24
25 GLD8	25	63.66	62.29	62.69	62.79
26 GLD8	26	66.21	64.84	65.24	65.34
27 GLD8	27	68.75	67.38	67.78	67.88
28 GLD8	28	71.30	69.93	70.33	70.43
29 GLD8	29	73.85	72.48	72.88	72.98
30 GLD8	30	76.39	75.02	75.42	75.52
31 GLD8	31	78.94	77.57	77.97	78.07
32 GLD8	32	81.49	80.12	80.52	80.62
33 GLD8	33	84.03	82.66	83.06	83.16
34 GLD8	34	86.58	85.21	85.61	85.71
35 GLD8	35	89.13	87.75	88.15	88.25
36 GLD8	36	91.67	90.30	90.70	90.80
37 GLD8	37	94.22	92.85	93.25	93.35
38 GLD8	38	96.77	95.39	95.79	95.89
39 GLD8	39	99.31	97.94	98.34	98.44
40 GLD8	40	101.86	100.49	100.89	100.99
41 GLD8	41	104.41	103.03	103.43	103.53
42 GLD8	42	106.95	105.58	105.98	106.08
43 GLD8	43	109.50	108.13	108.53	108.63
44 GLD8	44	112.04	110.67	111.07	111.17
45 GLD8	45	114.59	113.22	113.62	113.72
46 GLD8	46	117.14	115.77	116.17	116.27
47 GLD8	47	119.68	118.31	118.71	118.81
48 GLD8	48	122.23	120.86	121.26	121.36
49 GLD8	49	124.78	123.41	123.81	123.91
50 GLD8	50	127.32	125.95	126.35	126.45
51 GLD8	51	129.87	128.50	128.90	129.00
52 GLD8	52	132.42	131.04	131.44	131.54
53 GLD8	53	134.96	133.59	133.99	134.09
54 GLD8	54	137.51	136.14	136.54	136.64
55 GLD8	55	140.06	138.68	139.08	139.18
59 GLD8	59	150.24	148.87	149.27	149.37
60 GLD8	60	152.79	151.42	151.82	151.92
64 GLD8	64	162.97	161.60	162.00	162.10
68 GLD8	68	173.16	171.79	172.19	172.29
72 GLD8	72	183.35	181.97	182.37	182.47
76 GLD8	76	193.53	192.16	192.56	192.66
80 GLD8	80	203.72	202.35	202.75	202.85
84 GLD8	84	213.90	212.53	212.93	213.03
88 GLD8	88	224.09	222.72	223.12	223.22
90 GLD8	90	229.18	227.81	228.21	228.31
92 GLD8	92	234.28	232.90	233.30	233.40
96 GLD8	96	244.46	243.09	243.49	243.59
102 GLD8	102	259.74	258.37	258.77	258.87
106 GLD8	106	269.93	268.55	268.95	269.05
110 GLD8	110	280.11	278.74	279.14	279.24
112 GLD8	112	285.20	283.83	284.23	284.33
114 GLD8	114	290.30	288.93	289.33	289.43
118 GLD8	118	300.48	299.11	299.51	299.61
122 GLD8	122	310.67	309.30	309.70	309.80
126 GLD8	126	320.86	319.48	319.88	319.98
130 GLD8	130	331.04	329.67	330.07	330.17
134 GLD8	134	341.23	339.86	340.26	340.36
138 GLD8	138	351.41	350.04	350.44	350.54
142 GLD8	142	361.60	360.23	360.63	360.73
144 GLD8	144	366.69	365.32	365.72	365.82
146 GLD8	146	371.79	370.41	370.81	370.91
150 GLD8	150	381.97	380.60	381.00	381.10
154 GLD8	154	392.16	390.78	391.18	391.28
158 GLD8	158	402.34	400.97	401.37	401.47
162 GLD8	162	412.53	411.16	411.56	411.66
166 GLD8	166	422.71	421.34	421.74	421.84
168 GLD8	168	427.81	426.44	426.84	426.94
170 GLD8	170	432.90	431.53	431.93	432.03
174 GLD8	174	443.09	441.71	442.11	442.21
178 GLD8	178	453.27	451.90	452.30	452.40
182 GLD8	182	463.46	462.09	462.49	462.59
186 GLD8	186	473.64	472.27	472.67	472.77
190 GLD8	190	483.83	482.46	482.86	482.96
192 GLD8	192	488.92	487.55	487.95	488.05

Table 14

DIMENSIONS OF ISORAN RPP GOLD PULLEYS – PITCH 14 mm

PULLEY CODE	NUMBER OF TEETH	Dw PITCH DIAMETER	De EXTERNAL DIAMETER	De Blanks 04/10	De Blanks 5/10
28 GLD14	28	124.78	121.99	122.39	122.49
29 GLD14	29	129.23	126.44	126.84	126.94
30 GLD14	30	133.69	130.90	131.30	131.40
31 GLD14	31	138.15	135.36	135.76	135.86
32 GLD14	32	142.60	139.81	140.21	140.31
33 GLD14	33	147.06	144.27	144.67	144.77
34 GLD14	34	151.52	148.73	149.13	149.23
35 GLD14	35	155.97	153.18	153.58	153.68
36 GLD14	36	160.43	157.64	158.04	158.14
37 GLD14	37	164.88	162.09	162.49	162.59
38 GLD14	38	169.34	166.55	166.95	167.05
39 GLD14	39	173.80	171.01	171.41	171.51
40 GLD14	40	178.25	175.46	175.86	175.96
41 GLD14	41	182.71	179.92	180.32	180.42
42 GLD14	42	187.17	184.38	184.78	184.88
43 GLD14	43	191.62	188.83	189.23	189.33
44 GLD14	44	196.08	193.29	193.69	193.79
45 GLD14	45	200.53	197.74	198.14	198.24
46 GLD14	46	204.99	202.20	202.60	202.70
47 GLD14	47	209.45	206.66	207.06	207.16
48 GLD14	48	213.90	211.11	211.51	211.61
49 GLD14	49	218.36	215.57	215.97	216.07
50 GLD14	50	222.82	220.03	220.43	220.53
51 GLD14	51	227.27	224.48	224.88	224.98
52 GLD14	52	231.73	228.94	229.34	229.44
53 GLD14	53	236.19	233.40	233.80	233.90
54 GLD14	54	240.64	237.85	238.25	238.35
55 GLD14	55	245.10	242.31	242.71	242.81
56 GLD14	56	249.55	246.76	247.16	247.26
57 GLD14	57	254.01	251.22	251.62	251.72
60 GLD14	60	267.38	264.59	264.99	265.09
64 GLD14	64	285.20	282.41	282.81	282.91
68 GLD14	68	303.03	300.24	300.64	300.74
72 GLD14	72	320.86	318.07	318.47	318.57
76 GLD14	76	338.68	335.89	336.29	336.39
80 GLD14	80	356.51	353.72	354.12	354.22
84 GLD14	84	374.33	371.54	371.94	372.04
88 GLD14	88	392.16	389.37	389.77	389.87
90 GLD14	90	401.07	398.28	398.68	398.78
92 GLD14	92	409.98	407.19	407.59	407.69
96 GLD14	96	427.81	425.02	425.42	425.52
102 GLD14	102	454.55	451.76	452.16	452.26
106 GLD14	106	472.37	469.58	469.98	470.08
110 GLD14	110	490.20	487.41	487.81	487.91
112 GLD14	112	499.11	496.32	496.72	496.82
114 GLD14	114	508.02	505.23	505.63	505.73
118 GLD14	118	525.85	523.06	523.46	523.56
122 GLD14	122	543.67	540.88	541.28	541.38
126 GLD14	126	561.50	558.71	559.11	559.21
130 GLD14	130	579.32	576.53	576.93	577.03
134 GLD14	134	597.15	594.36	594.76	594.86
138 GLD14	138	614.97	612.18	612.58	612.68
142 GLD14	142	632.80	630.01	630.41	630.51
144 GLD14	144	641.71	638.92	639.32	639.42
146 GLD14	146	650.62	647.83	648.23	648.33
150 GLD14	150	668.45	665.66	666.06	666.16
154 GLD14	154	686.27	683.48	683.88	683.98
158 GLD14	158	704.10	701.31	701.71	701.81
162 GLD14	162	721.93	719.14	719.54	719.64
166 GLD14	166	739.75	736.96	737.36	737.46
168 GLD14	168	748.66	745.87	746.27	746.37
170 GLD14	170	757.58	754.79	755.19	755.29
174 GLD14	174	775.40	772.61	773.01	773.11
178 GLD14	178	793.23	790.44	790.84	790.94
182 GLD14	182	811.05	808.26	808.66	808.76
186 GLD14	186	828.88	826.09	826.49	826.59
190 GLD14	190	846.70	843.91	844.31	844.41
192 GLD14	192	855.61	852.82	853.22	853.32
194 GLD14	194	864.53	861.74	862.14	862.24
198 GLD14	198	882.35	879.56	879.96	880.06
202 GLD14	202	900.18	897.39	897.79	897.89
206 GLD14	206	918.00	915.21	915.61	915.71
210 GLD14	210	935.83	933.04	933.44	933.54
214 GLD14	214	953.65	950.86	951.26	951.36
216 GLD14	216	962.57	959.78	960.18	960.28

TOLERANCES ON THE EXTERNAL DIAMETER

Table 15

EXTERNAL DIAMETER (mm)	TOLERANCE (mm)
0 – 50	0 / +0.08
51 – 100	0 / +0.10
101 – 170	0 / +0.13
171 – 400	0 / +0.15
> 400	0 / +0.18

MAXIMUM PERMISSIBLE ECCENTRICITY

Table 16

EXTERNAL DIAMETER (mm)	ECCENTRICITY (mm)
< 100	0.100
>100	0.100+0.005x(De-100)

MAXIMUM LATERAL OSCILLATION

Table 17

EXTERNAL DIAMETER (mm)	ECCENTRICITY (mm)
< 100	0.100
>100	0.100xDe

BALANCING OF PULLEYS

Table 18

BALANCING OF PULLEYS	NUMBER OF TEETH	MAXIMUM OUT OF BALANCE COMPONENT (g)
RPP 8	< 130	8
	>130	16
RPP 14	< 70	8
	>70	16

PARALLELISM

Pulley axes must be parallel. Differences of not more than 0.01 mm for every 10 mm of axis length are acceptable.

TAPER

The taper of the pulley face diameter must be less than 0.001 mm for every 1 mm of face width. this value must be less than the tolerance on the external diameter of the pulley given in table 15.

SURFACE FINISH

The working surface of the pulley and flange faces must have a finish of less than 1.6 Ra (ISO R 468 specification)

Material

To right choice of material depends on the torque to be transmitted and on the size of the pulley.

Megadyne has tested successfully the following materials:

Steel: 8M.14M	39CrMoNi3. Fe40 etc.
Grey cast iron (minimum grade): 8M.14M	GG-25

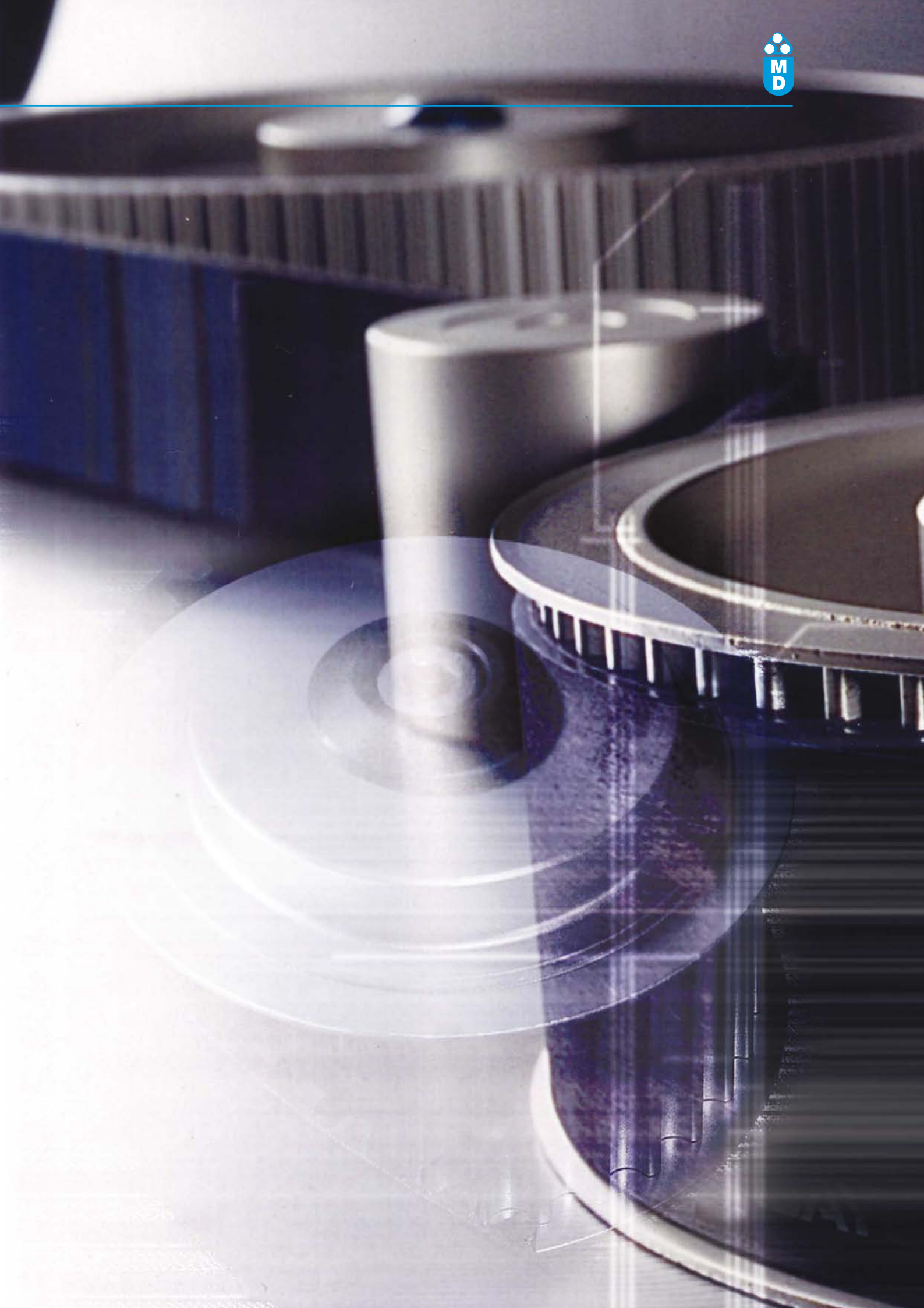

CAUSES OF PREMATURE BELT FAILURE

To ensure that the performance and durability of a toothed belt drive will fully meet the requirements of particular application, it is necessary firstly to accurately select the drive, and then to make sure the drive is correctly installed. If this procedure is not followed, the drive life and efficiency may be considerably reduced. The most frequent problems encountered, together with their probable causes, are listed in the table below. We hope that this will serve as a useful quick-reference guide, but if the drive problems persist or if they are not identified in the following list please consult MEGADYNE .

Problems	Causes	Corrective action
Abnormal wear of the belt: 1. on the side of the tooth	• Belt excessively taut • Excessive overloading • Incorrect contour or diameter of pulley	• Reduce centre distance • Use a wider belt • Replace pulley after checking contour or diameter
2. on the bottom of the tooth	• Excessive installation tension	• Reduce centre distance
3. at the tooth root	• Incorrect diameter of pulley	• Replace pulley after checking diameter
4. on the side of the belt	• Incorrect contour or diameter of pulley • Misalignment or wrong setting of pulleys • Oscillation of the axes and/or of the bearings • Flanges bent	• Replace pulley after checking contour or diameter • Replace pulley after checking contour or diameter • Correct the positioning of the pulleys and reinforce the bearings • Straighten flanges
Failure through traction or through laceration of the teeth, indicating corrosion of the tension member	• Diameter of small pulley i.e. below the minimum • Excessive moisture	• Increase the diameter of the pulleys or use belts and pulleys of smaller pitch • Eliminate the moisture
Laceration of belt teeth	• Number of teeth in mesh less than six • Excessive load	• Increase the number of teeth in mesh or use belts and pulleys of smaller pitch • Use a wider belt
Rupture of tensile member	• Excessive load • Diameter of pulley below minimum	• Use a wider belt • Increase the diameter of the pulleys
Breaks or cracks in the top surface of the belt	• Exposure to excessively low temperatures (below -25°C)	• Eliminate the low temperature
Softening of the top surface of the belt	• Exposure to excessively high temperatures (over +85°C) or operation with excessive amount of oil present	• Eliminate the high temperature or reduce the amount of oil present
Apparent elongation of the belt	• Reduction of centre distance due to bearings not being firmly fixed	• Restore the initial centre distance and strengthen the bearings
Belt overriding the flanges	• Faulty installation of the flanges • Misalignment of pulleys	• Reinstall the flanges properly • Align pulleys
Excessive wear of pulley teeth	• Excessive overloading • Belt excessively taut • Pulley material insufficient hard	• Use a wider belt • Reduce the centre distance • Harden the pulley surface
Drive excessively noisy	• Pulleys out of line • Excessive installation tension • Excessive load • Diameter of pulley below minimum	• Align pulleys • Reduce the centre distance • Use a wider belt • Increase the diameter of the pulleys

SPROCKET DIAMETER AND SPEED

Blanks in the Belt Basic Performance Tables indicate the pulley speeds exceed the safe operating speed of 30m/s for cast iron sprockets. For speeds greater than 30m/s contact Megadyne Engineering Department for other recommendations.

FLANGED PULLEYS

Each timing belt shows a natural trend to run on the pulley; this behaviour is due to the typical construction of the tensile members. Each cord is made of a few hundreds of filaments winded together to make a unique bundle and few bundles are twisted together.
The twisting direction produces the lateral tracking off.
A timing belt is produced with two different type of twisted cord to minimize this effect, nevertheless only using flanged pulleys is possible to prevent synchronous drive belts from tracking off.
It is necessary to provide at least one toothed pulley with side flanges. This is normally the smaller one for reason of cost. In alternative is also possible to use a single sided flange on each pulley.
In the case of drives with a centre distance of ≥ 8 dw, both toothed pulley are required to be equipped with flanges on both sides.
The shape and dimension of these flanges are shown in the table 19 and figure below.

Table 19

Belt type	Pitch (mm)	S (mm)	D(mm)	H(mm)
PLUS 8	8.0	2.3	0.4 +0.30/-0	2.1 +0.25/-0
PLUS 14	14.0	3.0	0.9 +0.50/-0	5.0 +0.25/-0

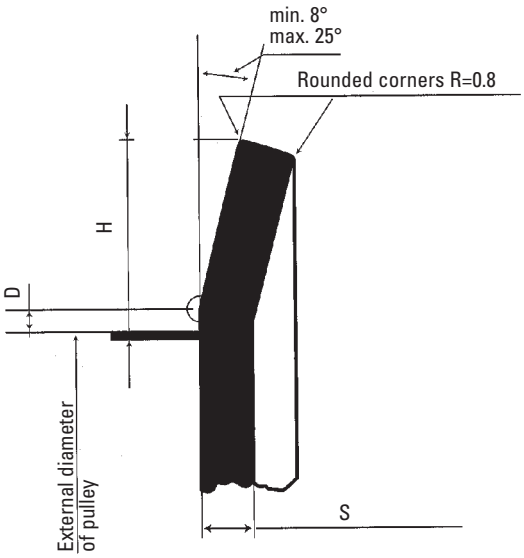

H= minimum height of flange
S= minimum thickness of flange

Tensioners

We recommend that the use of tensioners be limited to cases where they are essential.
For example:
1. in fixed axes drives, as a tensioning device;
2. in the drives having a high drive ratio, to increase the arc of contact on the small pulley.

Furthermore, the tensioner:

a) shall have a diameter not lower than the one of the smaller pulley;
b) may be fitted both inside and outside the belt, although we recommend whenever possible that it be fitted inside;
c) if fitted outside, it must have a flat face (not crowned);
d) if fitted inside, it must be toothed.

The use of normal tensioners with a flat face is permitted, as long as its diameter is not lower than that of a pulley having 40 teeth.

Fixed centres (no adjustmen)

True fixed centre applications are those where no provision has been made to adjust either the driveR or the driveN shaft. Fixed centres are not recommended for any synchronous belt drive other than motion transfer (low or no torque) drives. Fixed centres applications imply the need for exact tolerances. Although length tolerances for synchronous belts are considerably less than those for other belts, such as v-belts, etc., no belt can be manufactured without some tolerance. Sprocket manufacturing tolerances also contribute to fixed centre drive problems. Fixed centre applications do not allow for proper belt installation and tensioning practices and prevent accepted maintenance procedures. Because fixed centre applications prevent proper belt installation and tensioning procedures, reduced belt performance can result. Anymore if there is no possibility to use an idler or a tensioning device, contact Megadyne Engineering Department.

OPERATING ENVIRONMENT

Temperature
Environmental conditions expected for normal operation, normal storage, and use are:

- temperature -25° C to + 85° C
- only for instantaneous peak: +110°C

Antistatic properties
The New RPP Gold contains excellent anti-static qualities in comparison to similar belts offered by competitors and are manufactures in accordance with the values specified by British Standard 2050
(includere "BSI Declaration of Test Result")

USEFUL FORMULA FOR BELT DRIVE DESIGN

DATA REQUESTED	FORMULA	SYMBOLS USED
Pitch diameter of pulley (mm)	$D_p = \frac{N \times P}{\pi}$	N =number of teeth of pulley P =pitch of pulley (mm) π =3.1416
Linear belt speed (m/sec)	$V = \frac{\pi \times D_p \times n}{60.000} = \frac{D_p \times n}{19.098}$	D_p=pitch circle diameter of large pulley in mm n =rpm of larger pulley (min -1)
Torque (Nm)	$C = \frac{P \times 9.55 \times 10^3}{n}$	P =Power in kW n =rpm (min -1)
Power in kW (kW)	$P = \frac{T_e \times V}{10^3}$	T_e=effective belt tension in N V =linear belt speed (m/sec)
	$P = \frac{C \times n}{9.55 \times 10^3}$	C =torque in Nm n =rpm (min -1)
Centrifugal tension (N)	$T_c = \frac{W \times V^2}{10^3}$	W =weight of belt for unit length (gr. per metre) V =linear belt speed (m/sec)